Haloguard® III

MULTI-POINT, MULTI-GAS MONITOR

INSTRUCTION MANUAL

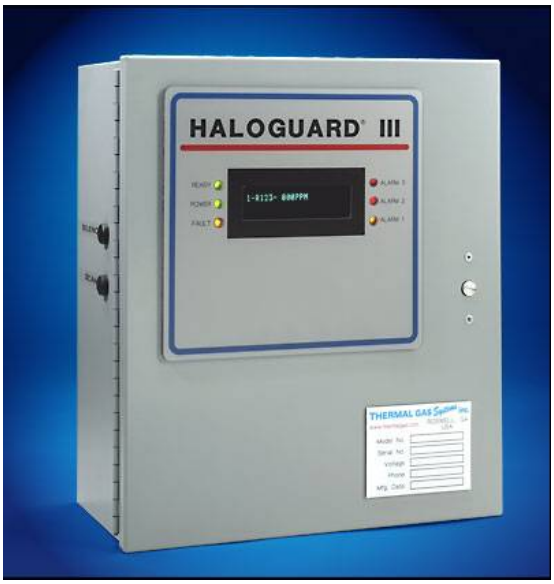

SERIAL NO. _____

MODEL NO. — — +

Temp. Range
1 - = > 60°F
2 - = 40 - 60°F
3 - = < 40°F

Gas/Points Gas/Points
A - R-11
B - R-12
C - R-22
D - R-134a
E - R-514a
F - NH3
G - R-123
P - R-404
Q - R-114
N - R-410a
Y - R-513a
UC - R-1233Zd

Outputs
1 - 7 x 10A Relays
2 - 0 - 5/10 VDC
3 - 4 - 20mA
4 - RS232

Options /Accessories
A - Audible Alarm
B - Battery B/U-UPS
D - Remote Display Module
H - Oxygen Sensor 0-25%
L - Strobe Light
S - Scanner (2, 4, or 8 Pts.)
M - Remote Sensor Module
V - 24Vdc Power Option
W - BACnet Interface Module

ThermGAS Inc.

11285 Elkins Road, Bldg. H-1 | Roswell, GA 30076

Tel: (770) 667-3865 | Toll-Free: (800) 896-2996 | Fax: (770) 667-3857

info@thermgas.com | www.thermgas.com

Revision 1.2j | 18 Nov 2026

******IMPORTANT******

USER MUST READ, FULLY UNDERSTAND AND FOLLOW ALL INSTRUCTIONS PROVIDED HEREIN BY THE MANUFACTURER FOR THE INSTALLATION AND OPERATION OF THE HALOGUARD III MONITOR. USE OF THE INSTRUMENT IN A MANNER NOT SPECIFIED HEREIN MAY IMPARE THE PROTECTION PROVIDED BY THE INSTRUMENT.

TABLE OF CONTENTS

		Page
1.	Unpacking Instructions	3
2.	Before Installation	3
3.	Function of LED's, Pushbuttons, & LCD Display Information	4
4.	Installation	6
5.	Set-Up & System Configuration	8
6.	Installation of Optional Remote IR Sensor Module	9
7.	Calibration, Testing, & Trouble Shooting	10
8.	Service & Assistance	10
9.	Maintenance, Obtaining Replacement Parts	11
10.	Specifications & Factory Settings	12

FIGURES & APPENDICES

		Page
1.	Typical Area Monitoring Installation	3
2.	Mounting Dimensions	4
3.	LCD Display Information	4
4.	Haloguard III Layout Drawing	5
5.	Analog Output Terminal Block Connections	6
6.	Circuit Board Layout	7
7.	Setup & Configuration Jumper Settings	8
8.	Remote Sensor Expansion Module Wiring Connection	9
9.	Remote Sensor Expansion Module Circuit Board	9
10.	Replacement Parts	11
11.	Accessories	11
12.	Initial Factory Settings for Gas Type & Alarm PPM Levels	12
13.	APPENDIX A - Analog Output Data Translation	13

11285 Elkins Road, Bldg. H-1, Roswell, GA 30076 | (770) 667-3865
info@thermgas.com | www.thermgas.com

UNPACKING INSTRUCTIONS

Haloguard monitors are carefully packed, inspected and delivered to the carrier in good condition. If damage occurs in transit it is the responsibility of the carrier. Carefully inspect the unit upon receipt. **Any damage should be reported to the carrier and an inspection requested.** After inspection by the carrier and your receipt of their acknowledgment as to the damage, contact us for a return authorization (RMA). We cannot file claims for damaged goods on your behalf, but we will assist you in any way we can. In order to expedite our work, please provide serial number and model number when you call.

WE CANNOT ACCEPT RETURNS WITHOUT PRIOR APPROVAL.

BEFORE INSTALLATION

1. Remove Haloguard III from carton. Check contents against packing list. If shipment is incomplete, contact us immediately.
2. Select a site for the installation:
   a. Power requirements: Provide a clean source of power, 100-240VAC, 50/60 Hz, single phase 15A minimum. *AC Line conditioning equipment may be necessary in some locations.*
   b. Sample tube pick-up should be located near potential leaks in a quiet area or downstream from leak source in area with air movement.
   c. Sample tube pick-up should be located 18" - 24" above finished floor. If using optional scanner, locate sample tubes at points near all chiller locations. Make sure each sample tube is equipped with an end of line filter.
   d. Make sure the area selected is not subject to flooding, potential impact or severe ambient temperature and humidity changes (i.e. boiler blow-down or near roll-up doors).
   e. Locate the unit so the front panel is easily seen and accessed for service and calibration, and that access to, and operation of the disconnect device is not restricted.
   f. Wide band infrared detector is non-selective and may respond to the presence of other gases if interfering gas reaches a high concentration. For accurate refrigerant leak detection select a location free from above vapors. Contact us for specific gas interference.
3. The Haloguard III should be installed indoors, about five feet (eye level) above the floor and at a location easily visible to operators, in an area with minimal vibration, and with temperature and humidity changes similar to the sample pick-up location. **DO NOT MOUNT DIRECTLY TO CHILLER.** The vibration may affect the operation of the unit, resulting in erroneous readings.

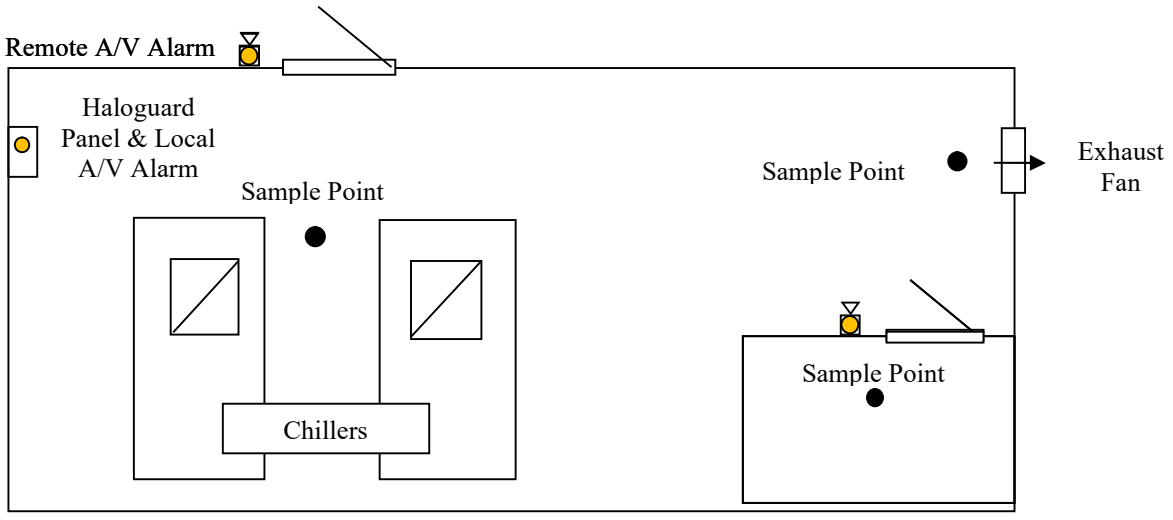

Figure 1-Typical Area Monitoring Installation

11285 Elkins Road, Bldg. H-1, Roswell, GA 30076 | (770) 667-3865
info@thermgas.com | www.thermgas.com

******IMPORTANT******
CONSULT LOCAL AND NATIONAL ELECTRICAL CODES FOR ANY SPECIAL REQUIREMENTS OR RESTRICTIONS BEFORE INSTALLING HALOGUARD III.

FUNCTION OF LED'S, PUSHBUTTONS, and LCD DISPLAY INFORMATION

1. READY LED - Steady LED means Haloguard III is measuring ppm; blinking indicates otherwise.
2. POWER LED – Green LED indicates Haloguard III is receiving power.
3. FAULT LED – Indicates malfunction. LCD displays specific type of failure (See Figure 3).
4. ALARM 1, ALARM 2, ALARM 3 LED's - Adjustable Alarm levels & relays - Factory set for particular refrigerant (See Figure 12). Alarm levels are user adjustable as follows:

MEASURMENT RANGE	1 PPM INCREMENTS	10 PPM INCREMENTS
0 - 1000 ppm	50 – 100 ppm	100 – 1000 ppm

5. MANUAL (scan) push-button – Allows manual scan of last ppm reading for all channels.
6. SILENCE/ RESET push-button - Silences alarms and disables relays for 20 minutes; used to manually acknowledge alarms set to LATCH mode. LCD displays RESET/SILENCE with 20-minute countdown. Alarms are automatically reactivated if alarm condition is not corrected.
7. Optional Display Features: TWA Integration – Haloguard III calculates an 8-hr. Time Weighted Average (TWA), displays this value on LCD, activates ALARM 1 LED and engages ALARM 1 relay if factory set value (50 ppm for R-123) is exceeded. Used for refrigerant gases with TLV-TWA's less than 1000 ppm. TWA alarm is factory set and not user adjustable.

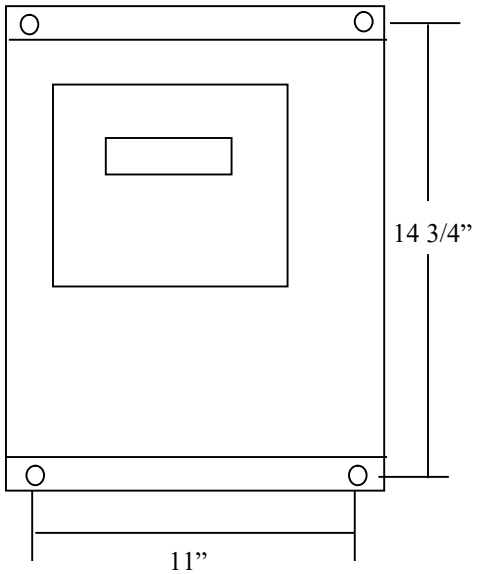

Figure 2- Mounting Dimensions

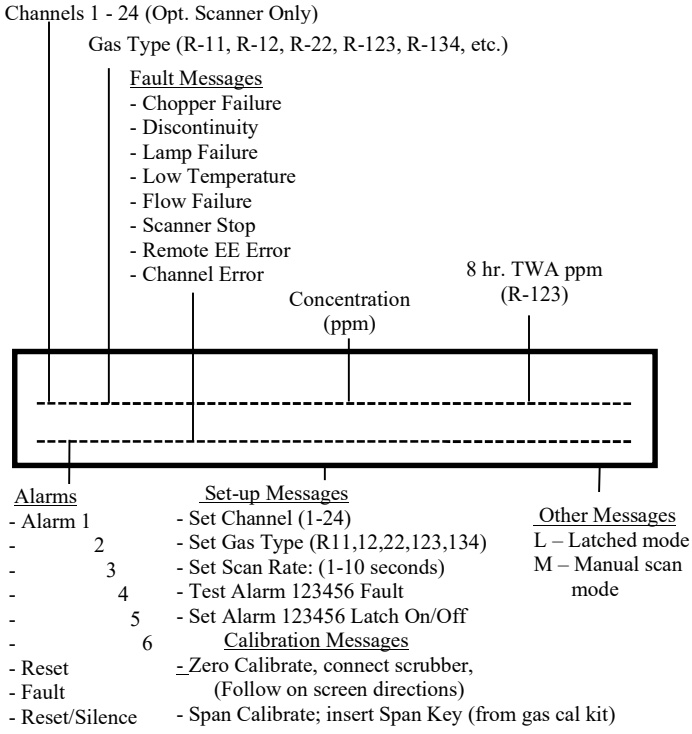

Figure 3 - LCD Display Information

11285 Elkins Road, Bldg. H-1, Roswell, GA 30076 | (770) 667-3865
info@thermgas.com | www.thermgas.com

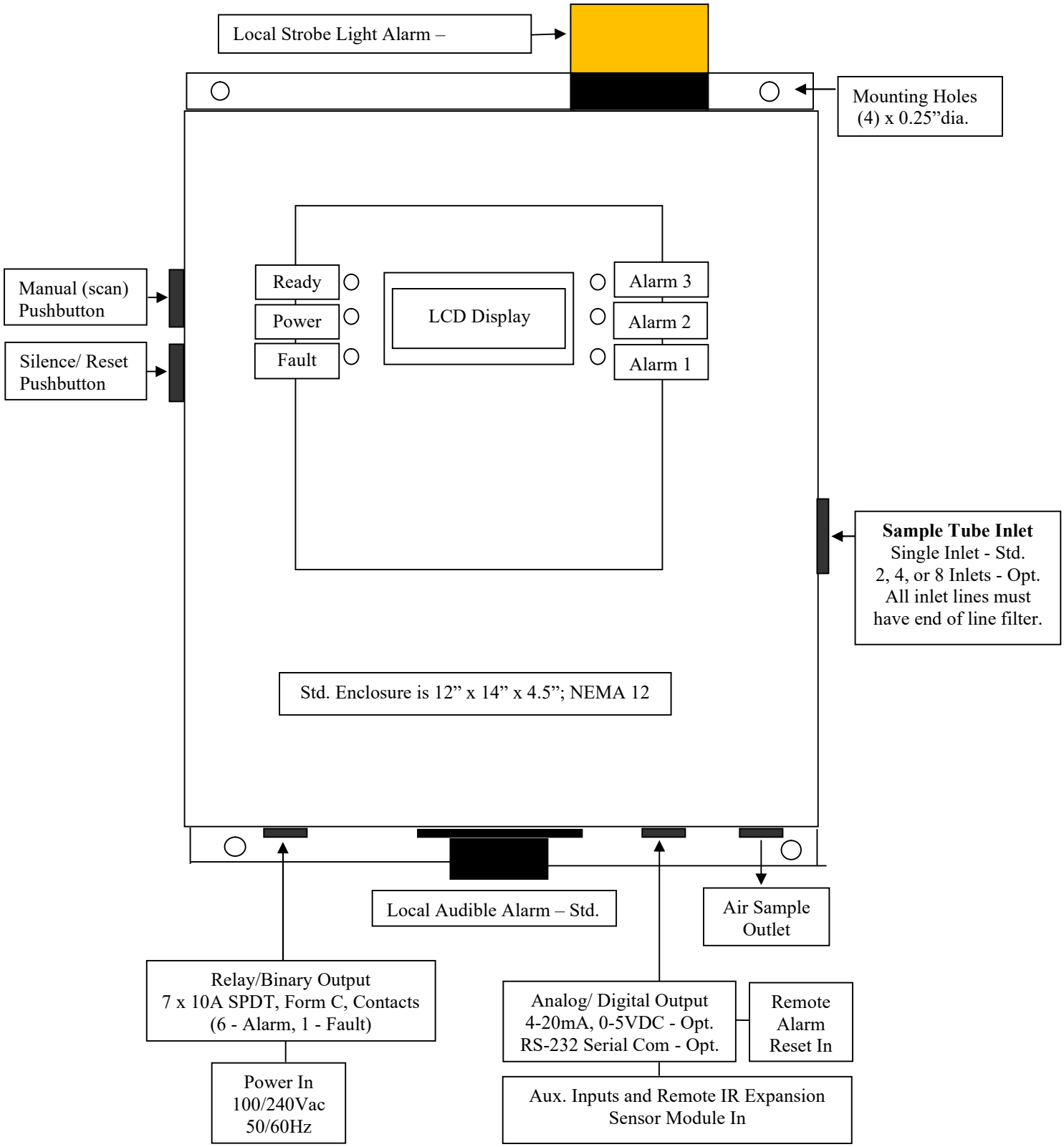

Figure 4 - Haloguard III Layout Drawing

11285 Elkins Road, Bldg. H-1, Roswell, GA 30076 | (770) 667-3865
info@thermgas.com | www.thermgas.com

INSTALLATION

1. Check power supply and determine best location. (See Section "**BEFORE INSTALLATION**")
2. Disconnect power before beginning.

Refer to figures 2, 3, 4, 5, and 6 before proceeding.

3. Installation
   a. Mounting Haloguard III
      1. Securely mount the unit to a wall or support using the (4) mounting holes.
      2. Remove cover.
      3. Install sample tube to 18-24" above finished floor, install end of line filter assembly. Sample inlet may be extended up to 300 Ft. with 0.125" OD x 0.093" I.D. nylon, copper or stainless steel tubing. When extending sample tubing:
         a. Keep sample lines as short as possible and free of kinks.
         b. Exhaust to atmosphere. **DO NOT** install any device that might restrict the flow.
      4. Route sample inlet tubing through entry indicated (Figure 4) and insert into one-touch fitting provided. To release tubing for removal, *push in* plastic ring on end of one-touch fitting.

   b. Wiring Connections:
      1. Relay Terminals – Route wire through entry indicated (Figure 4). Remove safety cover. Connect alarm relays **NO** or **NC** and **COM** as required (Figure 6).
      2. Power Supply Wiring - Route wire through entry indicated (Figure 4). Remove safety cover. Power connections are made to the terminal block labeled VOLTAGE IN (Figure 6). Connect black LINE AC wire to Terminal L. Connect white NEUTRAL wire to terminal N. Connect GROUND wire to grounding lug on inside of enclosure. Auxiliary terminal block labeled VOLTAGE OUT is provided to power remote audible and strobe light alarms. ***This output is not fused. Limit load to 12A max total.*** Connect through alarm relays (Figure 6) as required. Replace safety cover.

****WARNING** analog output is a driven signal; do not connect any wire with voltage or current to analog output terminals.**

      3. Analog Output (Optional) – Two analog outputs are provided for connection to remote recording devices; PPM ANALOG OUTPUT is for gas concentration and Fault info; CHANNEL ANALOG OUTPUT is for channel number (Figure 6). See "APPENDIX A" for analog output translation data. Connect 18 gage twisted, shielded pair as follows - maximum length 300 ft. for V or 2000 ft. for I. Connect shield to GND on Haloguard IR side only.

Analog Output Range	Terminal Position
0-10VDC	V and GND
4 - 20mA	I and GND

Figure 5 - Analog Output Terminal Block Connections

      4. External Input (VDC) – Three analog inputs (EXT INPUT 1-3) are provided for connection of remote input devices such as optional oxygen depletion sensors (Figure 6).
      5. Remote IR Input (mA) – Two analog inputs (REMOTE IR INPUT 1 & 2) are provided for connection of Haloguard Remote Expansion Modules (Figure 6). Each terminal block has connections for both channel (CHA), and ppm (SIG) input from the remote modules.
      6. Uninterruptible Power Supply (Optional) – Make sure UPS is fully charged. Plug UPS into power supply, turn switch ON. Connect Haloguard III to UPS, with power cord provided.
   c. Powering Up:

11285 Elkins Road, Bldg. H-1, Roswell, GA 30076 | (770) 667-3865
info@thermgas.com | www.thermgas.com

On power-up, **SYSTEM WARM-UP** and 20 minute count down will appear on LCD. For 20 minutes after power up pump, all alarms, and relays are automatically disabled. Whenever power is disrupted, **SYSTEM WARM-UP** mode will be automatic (unless optional UPS is supplied) to protect against false alarms. Allow 1 hour for complete warm-up from cold start.

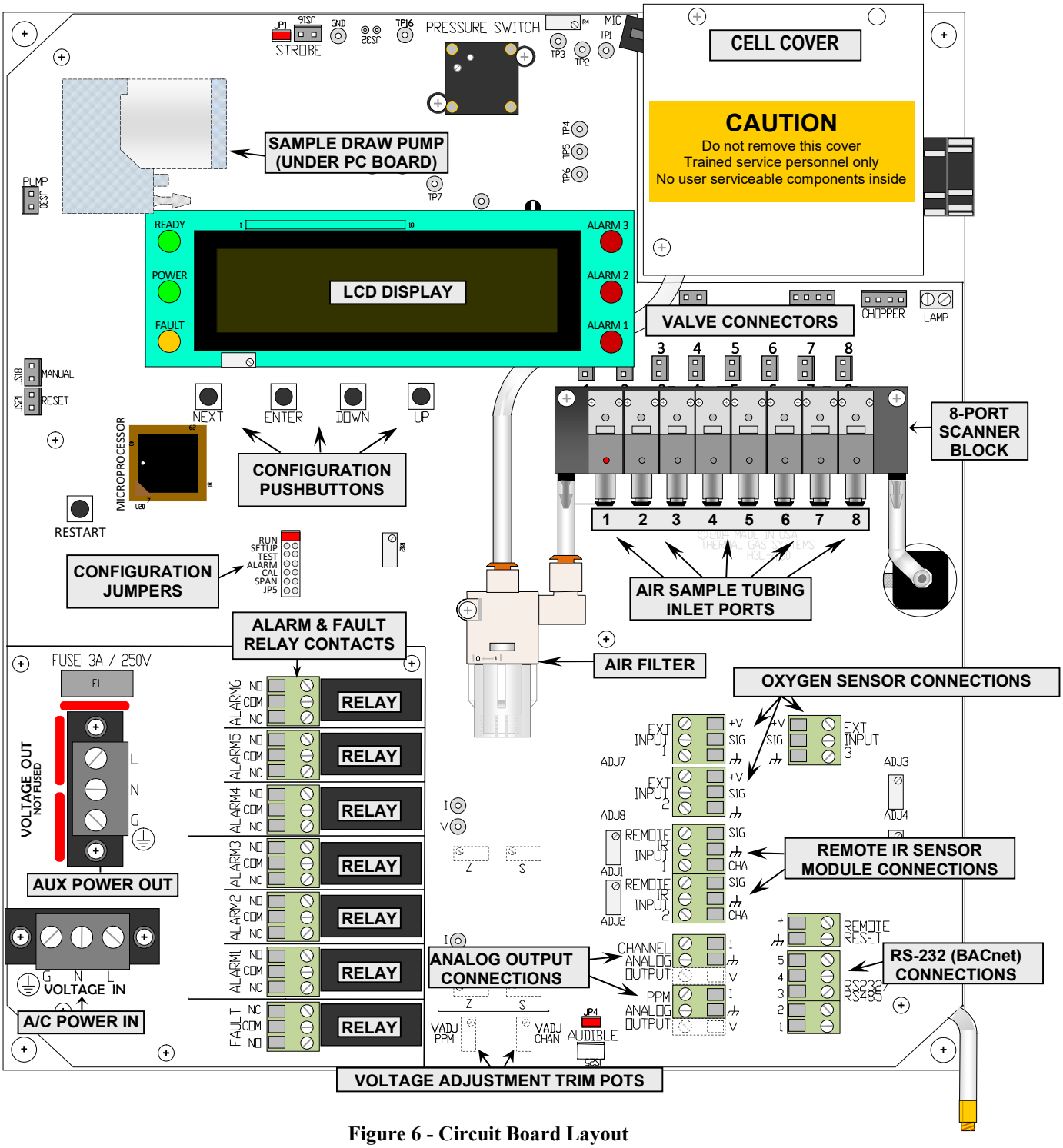

Figure 6 - Circuit Board Layout
(Shown with optional 8 Point Scanner)

11285 Elkins Road, Bldg. H-1, Roswell, GA 30076 | (770) 667-3865
info@thermgas.com | www.thermgas.com

SETUP and SYSTEM CONFIGURATION

Locate configuration jumpers on Figure 6. Select configuration settings from the following:

JP	MODE/FUNCTION
RUN	Select run for normal operation
SETUP	Set gas type and number of active channels
TEST	Sequentially activates all Alarm & Fault LED's & relays
ALARM	Set-point Adjustment for Alarms 1 thru 6. Latch ON/OFF
CAL	Zero Calibration
SPAN	For use only with span gas and calibration key
JP5	Factory only

Figure 7 – Setup & Configuration Jumper Settings

1. **RUN** – Normal operation jumper position. Replace jumper here when finished other modes.
2. **SETUP** – Gas types and number of active channels will be pre-set at the factory (Figure 12). To change gas type or activate a channel, first select the channel to activate with cursor using the UP and DOWN pushbuttons. Press ENTER then use the same pushbuttons to select the gas type for each channel. Be sure to press ENTER to select. "NONE" selected in the gas type menu will deactivate the channel (recommended if sample tubing and filter not present).
3. **TEST**- Select alarm to test with cursor by using the UP, DOWN, and ENTER pushbuttons.
4. **ALARM** –Alarm levels will be pre-set at the factory (Figure 12). Select the ALARM (1-6) to adjust with the cursor using the UP, DOWN, and ENTER pushbuttons. Use the same pushbuttons to change the alarm PPM set-point. "OFF" selected turns alarm off.
5. **CAL** – Install optional activated charcoal filter on channel 1; follow on screen directions for zero calibration using the ENTER pushbutton.
6. **SPAN** –Key and instructions for use are included with optional Span Gas Calibration Kit
7. **JP5**- Factory only.

System Configuration:

1. Relay Latch Setup - Factory setting is unlatched mode; e.g., the alarm LED's and relays will return to a normal status when gas concentration goes below alarm set-point. To select latched mode, move RUN jumper to ALARM setting then select LATCH mode with the cursor using the UP, DOWN, and ENTER pushbuttons. LATCH ON appears on the LCD Display. Latched mode requires pressing SILENCE/ RESET button to clear alarms.
2. Analog Output (optional) is factory set at 0-5VDC or 4-20mA as ordered. On voltage analog, use VADJ (PPM & CHAN) trim pots (Figure 6) to adjust voltage for up to 0-10VDC range.
3. LCD display adjustment potentiometer changes brightness (Figure 6).
4. Two, Four or Eight Point Scanner - (Optional) Scanner is factory installed. Scanner automatically sequences through each port (1-2, 1-4 or 1-8) at 2.5 min. per port sample rate.
5. Adjust Display Scan Rate - Rate is factory set at 5 seconds per point. Rate is adjustable from 1-10 seconds. To change scan display rate press ENTER pushbutton from RUN mode; adjust using UP and DOWN; press ENTER to return to RUN mode.
6. Manual Scan - While in RUN Mode, Press MANUAL button on side of controller. Display shows M. Each time the button is pressed; display will advance to next sample point and show the last ppm reading. Controller will return to automatic sequencing within 2 minutes.

11285 Elkins Road, Bldg. H-1, Roswell, GA 30076 | (770) 667-3865
info@thermgas.com | www.thermgas.com

INSTALLATION OF OPTIONAL REMOTE IR SENSOR (EXPANSION) MODULE

Refer to FIGURE 4, 6, 8, and 9 before proceeding.
DO NOT CUT SUPPLIED CABLE

Controller is provided with 18" cable with DIN connector and expansion module is provided with 6-1/2' cable for connection. If cable extension is required we recommend 3-conductor, 18-gage cable with foil shield, Carol C2535 or equal. Use 3/4" conduit if required. Maximum 1000' length.

To Extend Cable: Remove 18" cable with DIN connector from controller circuit board terminal block marked REMOTE INPUT 1 (or REMOTE INPUT 2). Splice or solder extension cable to end of 18" cable. Reconnect extended sensor cable to terminal block on circuit board of controller.

Terminal	18" cable Wire Color	Extension Wire Color	Remote Function
CHA	Red	Red	Channel #
SIG	White	White	PPM
GND	Black	Black	Ground
GND	Black/Bare	Bare	Shield

Notes - CHA Terminal is used for expansion modules with multi-channel scanner only.
Shield wire is connected to GND on the Haloguard Controller side only.

Figure 8 – Remote Sensor Expansion Module Wiring Connections

To avoid nuisance alarms remove "AUD" alarm jumper in Haloguard III before beginning.

To compensate for line losses adjust signal voltage with a digital VOM as follows:

1. Open cover on Remote IR expansion module. Move jumper from RUN to SETUP. **Wait approximately 1 minute before proceeding.** (Display of Haloguard III shows SETUP.)
2. Open cover on Haloguard III controller
3. With VOM on 5 VDC scale, place VOM probe on SIG (+) and GND (-) Test points on Haloguard III Main Board (Figure 6). **Adjust ADJ1 or ADJ2 potentiometer with screwdriver until it reads 4.975 +/- 0.025 VDC.**
4. If Remote expansion module is provided with scanner, lock the scanner on channel 1 using the jumper provided (Figure 9) on the Scanner Circuit Board. With VOM on 5 VDC scale, place VOM probe on CHA (+) and GND (-) Test points on Haloguard III Main Board (see Figure 6). **Adjust ADJ4 or ADJ5 potentiometer with screwdriver until it reads 1.0 +/- 0.05 VDC.**
5. Move scanner channel jumper in expansion module back to its original position.
6. Move jumper in expansion module back to RUN. Replace AUD jumper in Haloguard controller.

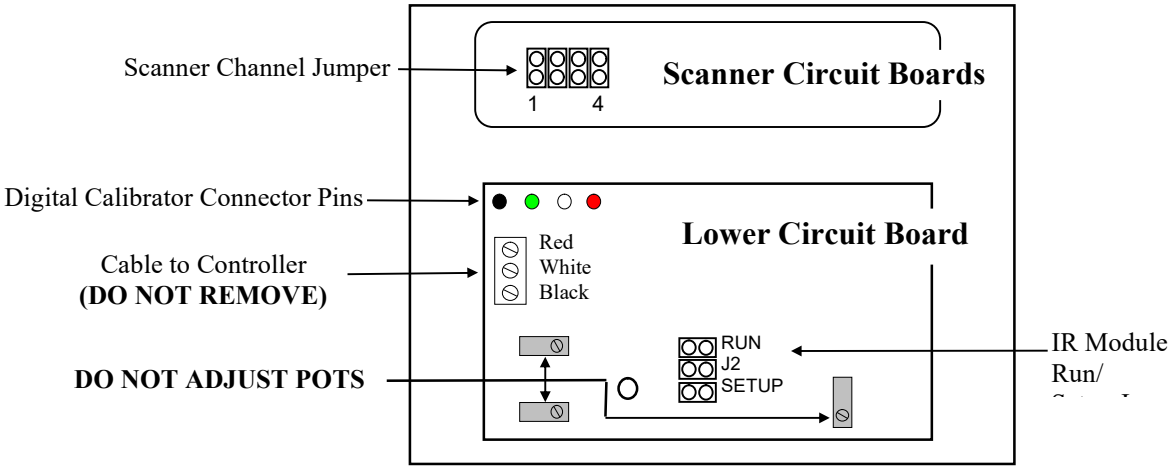

Figure 9 – Remote IR Sensor Expansion Module Circuit Board

11285 Elkins Road, Bldg. H-1, Roswell, GA 30076 | (770) 667-3865
info@thermgas.com | www.thermgas.com

CALIBRATION

Haloguard III monitors are factory calibrated to the primary gas of interest. Field calibration is not required for operation in typical machine room environments during the first twelve months of operation even if a change in gas type is required.

For those who wish to check the factory calibration or change the gas type, an optional Span Gas Calibration Kit is available. Instructions for use are included with kit.

TESTING

The Haloguard III should be tested at start-up, after any changes to alarm protocol, and after each alarm level condition has been corrected. During testing, display will indicate ALARM TEST

a. Alarm Test – Enter TEST mode with jumper, select alarm with cursor by using the UP, DOWN, and ENTER pushbuttons. Check all alarms sequentially. Alarm relays, lights, audible, analog outputs, and remote alarms (if equipped) will activate if selected.
b. Reset Test - Push RESET/SILENCE button; alarm relays, audible and remote alarms (if equipped) will become inactive for 20 minutes. Display will read RESET/SILENCE and indicate minutes to completion of reset period.

TROUBLESHOOTING

The most frequent cause of nuisance alarms and faults is improper set-up, primarily due to:

a. Failure to install in accordance with instructions.
b. Not allowing sufficient warm-up time.
c. Poor sensor location.

To check Zero Calibration, fill a clean plastic trash bag with clean outside air, tie off with twist-tie, let sample stabilize inside for 15 - 20 minutes. Insert sample tube into bag. For models equipped with scanner allow up to 2.5 minutes per channel for clean air sample analysis.

Observe LCD response; if displayed PPM value changes to near 0 PPM, the Haloguard III is detecting the presence of the gas of interest or another (interfering) gas in the room which absorbs infrared light at the same frequency.

Remove sample tube from bag and observe LCD response. If displayed PPM value moves higher, look for refrigerant leaks or possible sources of interfering gases (See “BEFORE INSTALLATION” section) and relocate sample point. Keep in mind that the Haloguard III is much more sensitive than hand held leak detectors, it may detect a leak when hand held units show no response.

SERVICE & ASSISTANCE

We wish to aid with any problems you might experience with the Haloguard III. When contacting ThermGAS Inc. Service Department, please have the following information ready:

1. Model Number and Serial Number.
2. Description of the problem.
3. Remove cover. Place RUN jumper on ALARM and record settings. Place jumper on SETUP and record settings. Place jumper on JP5 and record settings.
4. Advise the condition of all LED’s and the information displayed on the LCD

It may be necessary to return the Haloguard III to ThermGAS Inc. for service. Before returning unit, please obtain a Return Merchandise Authorization (RMA) from us. Carefully pack the Haloguard IR for shipping, as ThermGAS Inc. cannot be responsible for damage incurred in

11285 Elkins Road, Bldg. H-1, Roswell, GA 30076 | (770) 667-3865
info@thermgas.com | www.thermgas.com

transit. Please mark the top of the shipping carton with the RMA number assigned to the return. Address all returns to:

ThermGAS Inc. Service Department
11285 Elkins Road, Bldg. H-1, Roswell, GA 30076

MAINTENANCE

The Haloguard III refrigerant leak monitor is designed to provide long and trouble-free operation in normal machine room environments. Minimal maintenance is required. Self-diagnostics will indicate the cause of any unusual malfunction. To maintain appearance, clean the exterior with a soft, damp cloth. Do not use solvents, soaps or polishes.

Annual maintenance should include the following:

Inspect internal sample filters for discoloration (dirt build-up). Replace as necessary
Inspect all end-of-line filter(s) for dirt/ dust build-up. Replace as necessary
Inspect all tubing for brittleness, seal, and holes. Replace as needed.
Inspect all screws and terminal blocks for looseness. Tighten as needed.
Expose the sensor to clean air and span gas sources. Recalibrate as needed.

OBTAINING REPLACEMENT PARTS

To obtain spare or replacement parts and/or service and assistance please contact ThermGAS Inc. directly by email at info@thermgas.com or phone at 770-667-3865.

Description	Part No.
Internal Filter, element	A702A
External (EOL) Filter, element	A703A
Switcher Valve	A714
Pressure Switch	A708
Scanner Valve	A713
Scanner, 4-station Upgrade Kit	A502A
Scanner, 8-station Upgrade Kit	A503A

Figure 10 – Replacement Parts

Description	Part No.
Audible Alarm, Local	A603
Strobe Alarm, Local	A607
Audible Alarm, Remote	A605
Strobe Alarm, Remote	A606
Combination Audible/Strobe Alarm,	A604
Span Gas Calibration Kit	A204
Microprocessor	A704

Figure 11 - Accessories

******IMPORTANT******

USE ONLY GENUINE THERMGAS INC. REPLACEMENT PARTS WHEN PERFORMING ANY MAINTENANCE PROCEDURES. FAILURE TO DO SO MAY SERIOUSLY IMPAIR UNIT PERFORMANCE. REPAIR OR ALTERATION OF THE HALOGUARD III BEYOND THE SCOPE OF THESE INSTRUCTIONS OR BY ANYONE OTHER THAN AUTHORIZED THERMGAS INC. SERVICE PERSONNEL, COULD CAUSE THE PRODUCT TO FAIL TO PERFORM AS DESIGNED AND PERSONS WHO RELY ON THIS PRODUCT FOR THEIR SAFETY COULD SUSTAIN SERIOUS PERSONAL INJURY OR DEATH.

11285 Elkins Road, Bldg. H-1, Roswell, GA 30076 | (770) 667-3865
info@thermgas.com | www.thermgas.com

SPECIFICATIONS

Technology:	Wide bandwidth, Photoacoustic Infrared (PIR)
Electrical Supply:	100-240VAC, 50-60 Hz
Replaceable Fuse:	3A / 240V; fast acting
Alarm Outputs:	Six (6) Alarm-level contacts, Form-C, 240 VAC, 10A resistive
Fault Output:	One (1) Fault contact; Form-C, 240 VAC, 10A resistive, normally energized
Analog Output (Optional):	Two (2) independent 0-5, 0-10VDC or 4 - 20mA
Readout:	Digital LCD; displays channel number, ppm, gas type, and fault diagnostics
Display Resolution:	1 ppm - full scale
Display Range:	0 - 1000 ppm - all refrigerants
Operating Conditions:	32°F to 122°F (0°C to 50°C) and 0-95% RH, non-condensing
Fault Diagnostics:	Indicator light and LCD readout (also available through optional analog output)
Enclosure:	NEMA 250: Type-12 standard, Type-4 (optional)
Weight:	NEMA-12: 23 lbs. (10.4 kg.) NEMA-4: 28 lbs. (12.7 kg.)
Dimensions:	NEMA-12: 12" W x 14" H x 4.5" D (30.48 cm x 35.56 cm x 11.43 cm) NEMA-4: 12" W x 14" H x 6" D (30.48 cm x 35.56 cm x 15.24 cm)
Sensitivity:	20 ppm - all refrigerants
Sample Rate:	3.0 liter/min free air; 1.5 liter/min with 500' x .125" ID sample tubing
Response Time:	<1 minute for single-point, <2.5 minutes per point with optional multi-channel scanner
Agency Approvals:	ASHRAE-15 Compliant
Electrical Safety	Conforms to UL/CSA/EU 61010-1
EMC Compatibility	Conforms to FCC Part 15 B, ICES-003:Issue 5, ANSI C63.4:2009; EN 61326-1

FACTORY SETTINGS

The following parameters have been preset and are specific to the instrument whose serial number appears on the cover of this manual.

Channel	Gas Type	^Channel	Gas Type	^Channel	Gas Type
1		9		17	
2		10		18	
3		11		19	
4		12		20	
5		13		21	
6		14		22	
7		15		23	
8		16		24	

Alarm	PPM
1*	
2	
3	
4	
5	
6	

Figure 12 – Initial Factory Settings for Gas Type & Alarm PPM Levels

^ - Sample channels 9 – 24 are available only with use of optional Remote IR Sensor Modules with up to eight (8) sample channels per module.

* - 50 PPM TWA alarm is factory preset for R-123, if selected, and engages this relay. The instantaneous alarm level setting is shown here.

11285 Elkins Road, Bldg. H-1, Roswell, GA 30076 | (770) 667-3865
info@thermgas.com | www.thermgas.com

APPENDIX A

ANALOG OUTPUT DATA TRANSLATION

PPM & FAULT DATA VALUES

To calculate the analog outputs of the display value (PPM) use the following formulas.

For Voltage out: **Vout = ((PPM*56) +3277) * 7.629E-05**

For Current out: **Iout = [((PPM*56) +3277) * 2.441E-04]+4mA**

Display PPM values:

PPM	Vout (V)	Iout (mA)	Vterminated*
0	0.25	4.80	1.20
100	0.68	6.17	1.54
200	1.10	7.53	1.88
300	1.53	8.90	2.23
400	1.96	10.27	2.57
500	2.39	11.64	2.91
600	2.81	13.00	3.25
700	3.24	14.37	3.59
800	3.67	15.74	3.93
900	4.10	17.10	4.28
1000	4.52	18.47	4.62

Display Fault values:

Fault	Vout (V)	Iout (mA)	Vterminated*
Remote Discontinuity	0.000	4.00	1.00
Off Scale	4.575	18.64	4.66
Remote EE Error	4.625	18.86	
Flow Failure	4.675	18.96	4.74
Low Temperature	4.725	19.12	4.78
Lamp Failure	4.775	19.28	4.82
Chopper Failure	4.825	19.44	4.86
Scanner Stopped	4.875	19.60	4.90
Remote Channel Error	4.925	19.76	4.94
Remote In Setup	4.975	19.92	4.98

* **Voltage resulting from termination of Current out with a 250 Ohm resistor.**

11285 Elkins Road, Bldg. H-1, Roswell, GA 30076 | (770) 667-3865
info@thermgas.com | www.thermgas.com

ANALOG OUTPUT DATA TRANSLATION

CHANNEL DATA VALUES

Channel	Voltage (V)	Current (mA)	Vterminated*
1	0.20	4.64	1.16
2	0.40	5.28	1.32
3	0.60	5.92	1.48
4	0.80	6.56	1.64
5	1.00	7.20	1.80
6	1.20	7.84	1.96
7	1.40	8.48	2.12
8	1.60	9.12	2.28
9	1.80	9.76	2.44
10	2.00	10.40	2.60
11	2.20	11.04	2.76
12	2.40	11.68	2.92
13	2.60	12.32	3.08
14	2.80	12.96	3.24
15	3.00	13.60	3.40
16	3.20	14.24	3.56
17	3.40	14.88	3.72
18	3.60	15.52	3.88
19	3.80	16.16	4.04
20	4.00	16.80	4.20
21	4.20	17.44	4.36
22	4.40	18.08	4.52
23	4.60	18.72	4.68
24	4.80	19.36	4.84

* **Voltage resulting from termination of Current out with a 250 Ohm resistor.**

11285 Elkins Road, Bldg. H-1, Roswell, GA 30076 | (770) 667-3865
info@thermgas.com | www.thermgas.com