ThermGAS Inc.

INSTRUCTION MANUAL

HALOGUARD II

Multi-Gas | Multi-Sensor Monitor



HALOGUARD II

CMOS SYSTEM

- Installation
- Calibration
- Testing
- Troubleshooting
- Wiring diagram

MODEL IDENTIFICATION

SERIAL NO. _____

MODEL NO. _____

TEMP. RANGE

1 > 60 F
2 40-60 F
3 < 40 F

OUTPUTS

1 Four 3A relays
2 0-5 VDC or
0-10 VDC

SENSORS / GAS TYPE

A R-11
B R-12
C R-22
D R-134a
E R-113
F NH3
G R-123
H Oxygen
P R-404a
K R-407c
L R-507
N R-410a

OPTIONS / ACCESSORIES

A 120 dB Audible Alarm
B 1 Hr. Battery Back-up
C Auto Calibration
L Strobe Light
T TWA Integration

TECHNICAL CONTENT: REV 1.4 (09/13/2016) | BRAND UPDATE: 11/2026

IMPORTANT
READ ENTIRE BOOKLET BEFORE
INSTALLING OR OPERATING
HALOGUARD™ II MONITOR

TABLE OF CONTENTS

		Page
1.	Unpacking Instructions	3
2.	Before Installation	3
3.	Installation	6
4.	Calibration	7
5.	Testing	9
6.	Trouble Shooting	9
7.	Specifications	10
8.	APPENDIX A - Analog Output Data Translation	13

FIGURES

		Page
1.	Dimension Drawing	4
2.	Upper Circuit Board	4
3.	Lower Circuit Board	5
4.	Junction Box Relay Connections	5
5.	LCD Display Features	5
6.	Terminal Connectors	6
7.	Function Jumper Settings	7
8.	Alarm Jumper Settings	8
9.	Exposure Limits	8
10.	Initial Factory Settings	10
11.	Wiring Diagram	11

UNPACKING INSTRUCTIONS

Haloguard™ monitors are carefully packed, inspected and delivered to the carrier in good condition. If damage occurs in transit it is the responsibility of the carrier.

Carefully inspect the unit upon receipt. Any damage should be reported to the carrier and an inspection requested. After inspection by the carrier and your receipt of his acknowledgment as to the damage, contact us for return authorization (RMA). We cannot file claims for damaged goods on your behalf, but we will assist you in any way we can.

In order to expedite our work, please provide serial number and purchase date when you call.

WE CANNOT ACCEPT RETURNS WITHOUT PRIOR APPROVAL.

BEFORE INSTALLATION

1. Remove Haloguard™ from carton. Check contents against packing list. If shipment is incomplete, contact us immediately.
2. The following tools and hardware may be required for installation and calibration.
   a. Two standard screwdrivers; 1 - medium, 1 - jewelers fine.
   b. Needle-nosed electrician's pliers
   c. 9/32" Nut driver
   d. (3) No. 10 x 1" Screw - minimal length
   e. Digital VOM
3. Select the site for the measurement:
   a. Power requirements: Provide a clean source of 115-230 VAC, 50/60 Hz, single phase circuit rated 15A minimum.
   b. Sensor element should be located near potential leaks in a quiet area or downstream from leak source in area with air movement.
   c. Sensor element should be mounted 18" - 24" above the floor for halocarbons and near the ceiling for ammonia.
   d. Make sure the area selected is not subject to flooding, potential impact or severe ambient temperature and humidity changes (i.e. boiler blow-down or near roll-up doors).

IMPORTANT

SENSOR ELEMENT CAN BE DESTROYED BY IMMERSION IN LIQUIDS OR EXPOSURE TO SILICONE. COVER SENSOR WITH A PLASTIC BAG WHEN SILICONE VAPORS ARE PRESENT IN MONITORED AREA. IMMERSION OR SILICONE EXPOSURE INVALIDATES SENSOR LIFE WARRANTY.

   e. Halocarbon and LFL Sensor will respond to presence of alcohol, hydrogen, carbon monoxide, paint thinner, and many toxic and combustible gases. For accurate refrigerant leak detection select a location free from above fumes or temporarily disable sensor as above when they are present.
4. The wall mounted controller should be installed indoors, approximately five feet above the floor (or at a location easily visible to operators), in an area with minimal vibration, and with temperature and humidity changes like sensor location.

IMPORTANT
CONSULT LOCAL AND NATIONAL ELECTRICAL CODES FOR ANY SPECIAL REQUIREMENTS OR RESTRICTIONS BEFORE INSTALLING HALOGUARD™.

5. **LED Indicators, Pushbuttons, LCD Display, and Relays**
   a. AUTO/MAN Push-button - In the AUTO mode, the Haloguard™ II automatically scans all active channels in sequence. Manual mode is initiated by pushing the MAN push-button. In the MAN mode, monitor remains locked in a single channel until manually sequenced to another channel, by pushing MAN push-button. After 2 minutes, sequencer will automatically default to AUTO mode.
   b. TEST Push-button -When depressed alarm relays, lights, audible and remote devices (if equipped) will activate. Analog outputs will go full scale
   c. ZERO Push-button - Reads sensor output and sets this value equal to “zero” ambient condition. ZERO function is inactive when in ANY alarm condition or during RESET (See Calibration 3c).
   d. OFFSCALE Alarm LED and Relay - Factory set at a value 2 - 3 times the full scale.
   e. HI ALARM/ LO ALARM LEDs and Relays - User adjustable 10% to 100% of Full-scale value (See Calibration 4.0).
   Note: Optional TWA Integration activates LO Alarm LED and relay.
   f. FAULT LED and Relay - Indicates power failure, out of calibration or sensor failure.
   g. POWER LED indicates Haloguard ™ is receiving power.
   h. RESET Pushbutton and LED - indicates Haloguard ™ in 20 minute RESET mode. During RESET mode all alarm relays, audible and visual alarms are disabled. Alarms are automatically enabled if alarm condition is not corrected in 20 minutes. Reset is automatically initiated on power up.

RESET mode is automatically initiated on power up and whenever power is disrupted (unless Haloguard Controller is equipped with battery back-up).

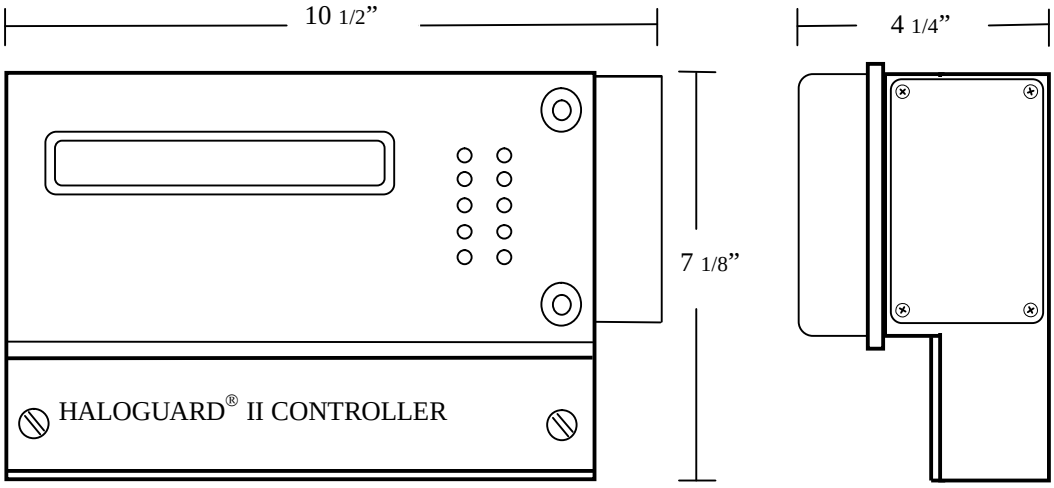

Figure 1 - Dimensional Drawing

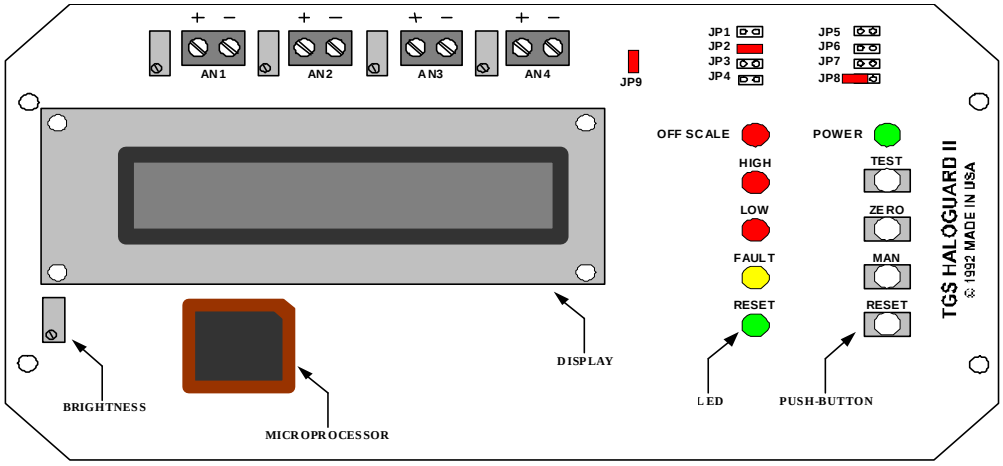

Figure 2 - Upper Circuit Board

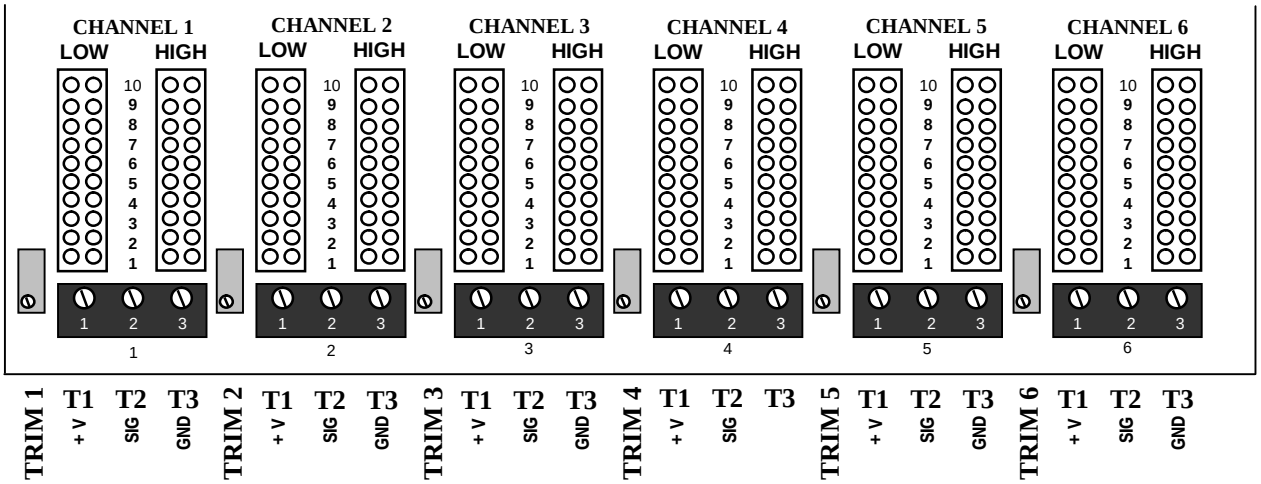

Figure 3 - Lower Circuit Board

	1	○	NC
OFF SCALE	2	○	COM
	3	○	NO
	4	○	NC
HI ALARM	5	○	COM
	6	○	NO
	7	○	NC
LO ALARM	8	○	COM
	9	○	NO
	10	○	NC
FAULT	11	○	COM
	12	○	NO

Figure 4 - Junction Box Relay

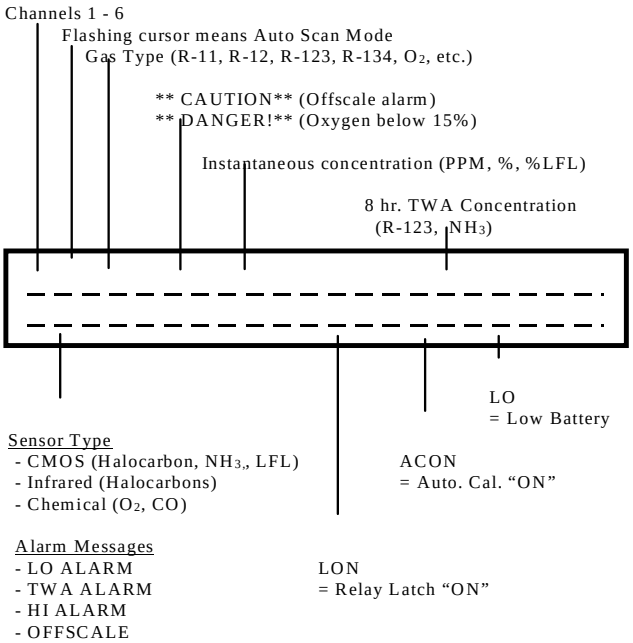

Figure 5 - LCD Display Features

INSTALLATION

1. Check power supply. (See Section "Before Installation 3a")
2. Disconnect power before beginning.
3. To mount Haloguard™ controller:
   a. Install No. 10 x 1" screw (minimum) wall fastener at approximate center of desired location. Slip controller over fastener.
   b. Remove lower cover from controller to expose lower circuit board. Install two additional fasteners through holes provided beneath lower cover.
   c. Replace cover.
4. Mount sensors in a **VERTICAL DOWN** position (Oxygen sensors **MUST** be in vertical down position to operate properly) on indoor surface with mounting clip provided or in duct work if provided with mounting flange. Run cable to controller location. Eight feet (8ft.) of cable with DIN connectors standard; optional extension cables are available.

Refer to *FIGURE 3 - Lower Circuit Board* before proceeding.
DO NOT CUT SUPPLIED CABLE
Maximum Extension wire - 300 Feet.

a. Controller is provided with 18" cable with DIN Connector and sensor is provided with 6 1/2' cable. If cable extension is provided by customer, proceed as follows:

For cable runs longer than 100 feet 3 conductor 18 ga. cable with foil shield, Carol C0455 or equal is recommended. Use 3/4" conduit if required.

To extend sensor beyond the provided length, remove 18" cable with DIN connector from controller Lower Circuit Board. Splice or solder extension cable to end of 18" cable. Reconnect extended sensor cable to proper terminal block in lower circuit board of controller. Start with Channel 1 and **connect in sequence** until all are connected as follows:

Terminal	Provided Wire Color	Extension Wire Color	Function
T1	Red	Red	VDC
T2	White	White	Signal
T3	Blk./Blk	Black	Ground

Figure 6 - Terminal Connection

5. Set **HI/LO ALARM** jumpers for each sensor at 10. (See Figure 3 and 8 for Lower Circuit Board settings).
6. Remove cover and face plate from controller using nut driver; remove junction box cover.

Refer to Figures 2,3, and 4 before proceeding

****WARNING****ANALOG OUTPUT IS A DRIVEN SIGNAL-DO NOT CONNECT ANY WIRE WITH VOLTAGE OR CURRENT TO ANALOG OUTPUT TERMINALS**

7. Connect alarm relays **(NO or NC)** and analog outputs **AN 1 thru 4 (+) SIG and (-) GND** if supplied) where indicated. **READ WARNING LAST PAGE**
8. Connect power (Connect optional battery back-up if supplied.)
9. For 20 min. after initial power up all alarm relays and audible are automatically disabled. During initial power up RESET LED will be lit. Whenever power is disrupted, RESET MODE will be automatic (unless equipped with battery back-up) to protect against false alarms.

Due to variations in the ambient (temp. and R.H.) zero calibration must be initially and periodically checked to assure best performance. (See Calibration Section)

10. Locate SETUP jumpers JP-1 thru 9 on Upper Circuit Board (**Figure 2**). Select required settings from the following menu:

JP	FUNCTION
JP-1	In house **ONLY.**
JP-2	Optional AutoCalibration (See 11a)
JP-3	Set scan rate, 0-10 sec. adjustable (See 11b)
JP-4	Set gas type and channel (See 11c)
JP-5	In House Use **ONLY.** System set-up info.
JP-6	In House Use **ONLY.** Set Clock
JP-7	In House Use **ONLY**. (Contact mfg. for changes)
JP-8	Relay Latch and jumper storage. (See 11d)
JP-9	Optional Audible alarm.(See 11e)

Figure 7 - Function Jumper Settings

11. After selecting from the above, the LCD will show a new mode (SETUP, etc.) and the MAN, ZERO and TEST push-buttons will have new functions.

Refer to Figures 2 and 5 before proceeding

a. **Auto Calibration** (Optional) select JP-2, LCD shows ACON. Haloguard™ compares temp. and RH every 4 hours to compensate for changes in ambient.
b. **Scan Rate** - Rate is factory set at 4 sec. per active channel. To change, select JP-3, push ZERO or TEST and step to desired rate. Remove jumper from JP-3.
c. **Channel and Gas Type** - See *Figure 10 - Initial Factory Setting* for channel set-up. To change, select JP-4. Press ZERO or TEST and sequence to channel (1 thru 6) desired. Press MAN to initiate gas type menu. Press ZERO or TEST and scroll to gas type desired (Note: "None" selected will skip channel). Press MAN to initiate sensor type menu. Press ZERO to select CMOS or INFRARED as desired. Proceed to next channel and follow same process. When finished, remove jumper from JP-4.
d. **Relay Latch Setup** - Recommended factory setting is Unlatched Mode; the alarm LEDs and relays will return to a normal status when gas concentration goes below alarm set point. To select Latched Mode place jumper on JP-8. Press RESET button to release alarm or check for false alarm (Note: Alarm will be disengaged for 20 minutes).
e. **Audible Alarm** - JP-9 is factory installed to activate alarm circuit. To silence alarm remove JP-9 jumper.

12. **TWA Integration**, (Optional). Haloguard™ calculates an 8 hr. **TLV-TWA,** displays this value on LCD, activates LO alarm LED and relay if preprogrammed PPM value is exceeded. (**Haloguard™ must be powered up for 8 hrs. to build database before operating).**
13. Trim optional analog outputs by entering TEST mode (See **TESTING**) and turning potentiometers on AN 1 thru AN 4 (see Figure 2 Upper Circuit Board) until output measures 5.0 or 10.0 VDC as required.

CALIBRATION

1. The Haloguard™ has been factory calibrated under standard conditions (70°F, 65% R.H.). **Due to variations in the ambient (temp. and R.H.) zero calibration must be initially and periodically checked to assure best performance.**

2. **The Haloguard™ should be powered up (operated continuously) for 24 hours before calibration.**

Remove Alarm Set point Jumper from all active channels before beginning calibration.

3. Calibrate with a digital VOM as follows:

HALOCARBON AND LFL SENSORS "ZERO" CALIBRATION

ZERO CALIBRATION MUST BE COMPLETED FOR EACH SENSOR (1 thru 6)

a. For CMOS sensors: With VOM on 1 VDC scale, place VOM probe on T2 (+) and T3 (-) Test points (see Figure 3 Lower Circuit Board).

Select MAN mode with push-button, sequence to first channel. Adjust potentiometer to the left of the terminals with screwdriver until it reads 1.0 VDC. Push ZERO. Sequence to subsequent active channels and follow same procedure for each channel. Haloguard™ automatically returns to scanning mode after 2 minutes or press TEST button to start scanning.

b. For Oxygen sensor: Locate sensor adjustment screw in sensor head cover. Adjust until controller LCD shows normal Oxygen atmosphere (typically 20.9% - 21.0%).

c. LCD display adjustment changes brightness - Adjust potentiometer (See Figure 2 Upper Circuit Board).

4. Alarm Set points Adjustment - (See Figure 3 - Lower Circuit Board) Place jumper on appropriate alarm point to initiate visual and audible alarm relays.

Jumper Settings	Range	Range	Range
Low/High	0 - 200	0 - 300	0 - 1000
10	200	300	1000
9	180	270	900
8	160	240	800
7	140	210	700
6	120	180	600
5	100	150	500
4	80	120	400
3	60	90	300
2	40	60	200
1	20	30	100

Figure 8 - Alarm Jumper Settings

GAS	TLV-TWA*	CEIL	PEL
R-11	•	1000	•
R-12	1000	•	1000
R-22	1000	•	1000
R-123	50	•	•
R-134a	1000	•	1000
R-500	1000	•	1000
R-502	1000	•	•

Other exposure limits are pending.
TLV-TWA = 8hr./day, 40hr./wk. avg. Short term exposures should not exceed 3 - 5 times the TWA for more than 30 min./day.
* ACGIH Trademark.

Figure 9 - Exposure Limits

NOTE: Oxygen sensor ALARMS are preprogrammed at 19.1% (LO) and 16% (HI); OFFSCALE ALARM - preprogrammed at 1 - 2 times full scale.
(Optional) TWA Integration, LO alarm is pre-programmed to the TLV-TWA for specified gas.

SPAN CALIBRATION

Span calibration is **not required** for operation in typical machine room environments. Optional Span Gas Calibration Kits are available upon request. Instructions for calibration are included with kit.

TESTING

1. The Haloguard™ should be tested periodically and 30 minutes after each alarm level condition has been corrected.
   a. Alarm Test - Press TEST push-button. Energizes alarm relays, lights, audible and remote alarms (if equipped). Analog outputs will go full scale. Depress button five (5) times to sequence through each alarm type then return to RUN mode.
   b. Reset Test - Push RESET button; alarm relays, audible and remote alarms (if equipped) will become inactive for 20 minutes. RESET LED will be green.

TROUBLESHOOTING

The most frequent cause of nuisance alarms is improper set-up, primarily due to:

a. Too short a warm-up time before Zero Calibration.
b. Poor sensor location.

To check Zero Calibration, fill a clean plastic trash bag with clean outside air, tie off with twist-tie, let sample stabilize inside for 15 - 20 minutes, and insert sensor into bag.

Follow Zero procedures under “Calibration” Section. Remove sensor from bag and observe LCD response.

If PPM then moves higher, look for possible sources of interfering gases (See “Before Installation” section 3e). and relocate sensor.

We wish to aid with any problems you might experience with the Haloguard™ line of products.

When contacting ThermGAS Inc. Technical Support, please provide the following information:

1. Model Number and Serial Number.
2. Description of problem.
3. Remove faceplate from Upper and Lower Circuit Board (Figures 2 and 3) . Advise jumper positions.
4. Remove Junction Box cover (Figure 4). Advise where Alarm wires are connected.
5. Using (Figure 3 Lower Circuit Board) as a guide, measure voltage between +V and GND.; SIG and GND, for all active sensors. Write down values.
6. Using LCD Display (Figure 5) as a guide, observe the LCD as it scrolls. Write down values.
7. Advise the condition of all LED’s on the faceplate.

SPECIFICATIONS

Technology: CMOS - Ceramic Metal Oxide Semiconductor
Oxygen - Electro Chemical

Electrical Supply: 115-230 VAC, 50-60Hz

Output Signal: Std. 4 x 8A Dry Contact Relays (either NO or NC)
Opt. 4 x 0 - 5 VDC Analog

Alarm Outputs: Three Level Contact Closure

Readout: Digital Meter, Displayed in PPM Gas Type, Range and options.

Accuracy: 10% Full Scale (CMOS)
1% Electrochemical (Oxygen)

Ranges: 0 - 1000 ppm CFC, HCFC, HFC
0 - 300 ppm NH_3, HCFC (Opt)
0 - 20% LFL Flammability
0 - 25% Oxygen

Response Time: < 1 Minute per sample point

Operating Conditions:
CMOS Sensor -20°F to +120°F Non-condensing
Oxygen Sensor +40°F to +110°F Non-condensing
Controller 0°F to +120°F Non-condensing

Fault Diagnostics: Indicator Light or Readout for Malfunction which include: (See Figure 5)

Materials:
Controller Polystyrene, NEMA 12/13, IP65
Design
CMOS Sensor PVC and porous PP

Weight:
Controller: 4 lbs. (Add 2 lbs. optional battery)

Dimensions:
Controller 10-1/2" W x 7-1/8" H x 4-1/4"D

Initial factory settings are:

Channel	1	2	3	4	5	6
Gas						
Sensor Type						
Full Scale PPM						
TWA Alarm Level						

Figure 10 - Initial Factory Settings

GLOSSARY

1. **PEL-** Permissible Exposure Limits - The employee's average short term exposure in any 8-hr work shift, which shall not be exceeded.
2. **CONTROLLER -** Processor mounted on wall which includes LCD Display, LED Alarms Relays, and other functions
3 **CEIL-**The concentration that shall not be exceeded during any part of the work day**.**
4. **SPAN -** A full-scale reading on the LCD display.
5. **TLV-TWA -** The time -weighted average concentration for a normal 8 hr. work day and a 40 hr. work week, to which nearly all workers may be repeatedly exposed, day after day, without adverse effect.
6.. **ZERO -** An indication on the display indicating the presence or non-presence of CFC's, HCFC's or HFC's.

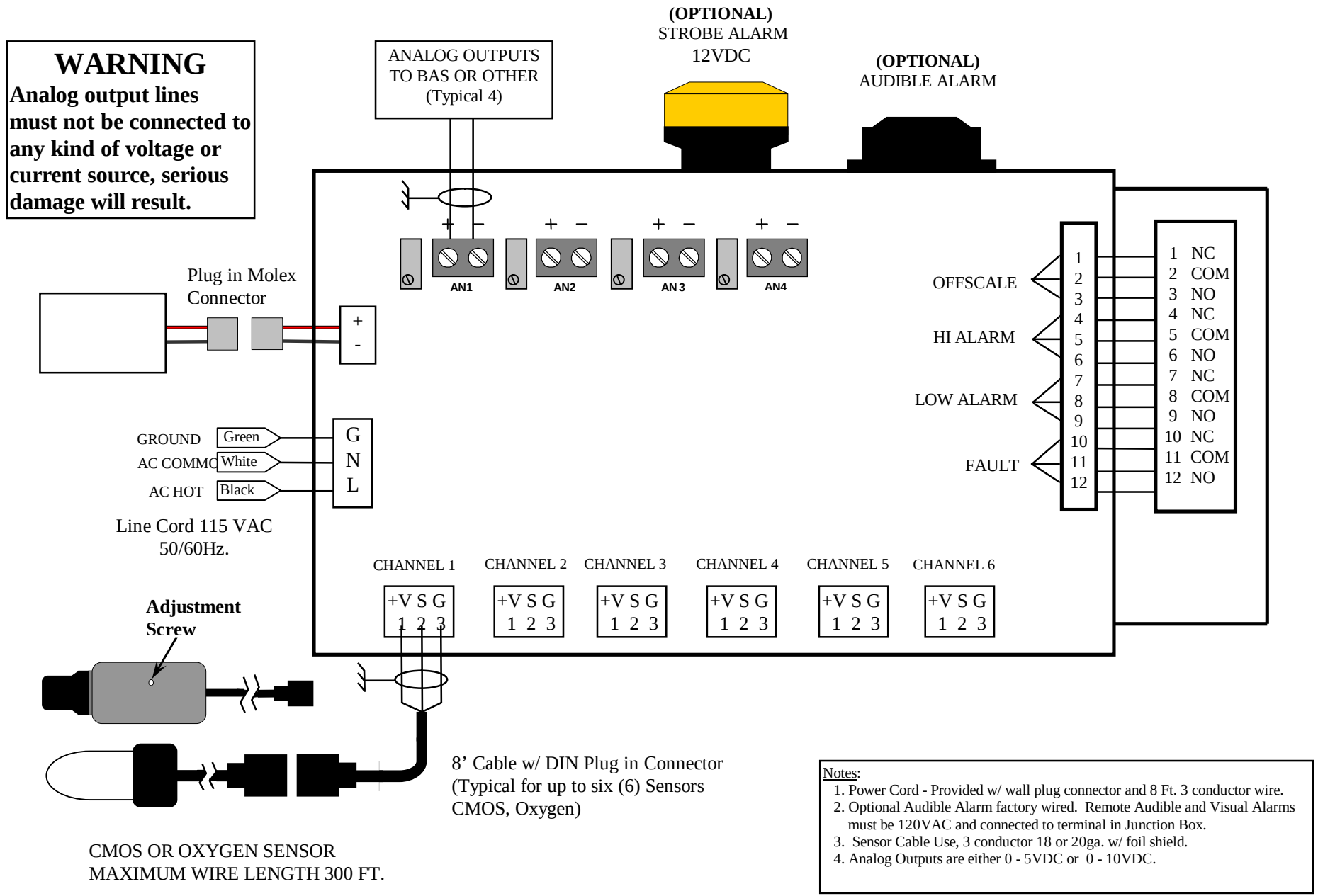

Figure 11 - Wiring Diagram

THIS PAGE INTENTIONALLY LEFT BLANK

APPENDIX A

ANALOG OUTPUT DATA TRANSLATION

****WARNING****

ANALOG OUTPUT IS A DRIVEN SIGNAL - DO NOT CONNECT ANY WIRE WITH VOLTAGE OR CURRENT TO ANALOG OUTPUT TERMINALS

The Analog Output is a linear signal between 0% and 90% of full scale; therefore, the values of a given sensor may be accurately determined by graphing the two display readings and their voltage values as a straight line through the two points.

Trim analog outputs by entering TEST mode (See **TESTING**) and turning potentiometers on AN 1 thru AN 4 (see Figure 2 Upper Circuit Board) until output measures 5.0 or 10.0 VDC as required.

CMOS VALUES

PPM		Vout (V)	Vout (V)
(1000 Span)	(R123)	0-5V	0-10V
FAULT		0.00	0.00
0	0	0.50	1.00
100	30	0.99	1.99
500	150	2.96	5.92
900	270	4.93	9.86
1000	300	5.00	10.00
OFFSCALE		5.00	10.00

OXYGEN VALUES

%O2	Vout (V) 0-5V	Vout (V) 0-10V
FAULT	0.00	0.00
10.0	2.29	4.59
15.0	3.19	6.38
16.0	3.37	6.74
19.1	3.92	7.85
19.5	4.00	8.00
20.9	4.25	8.49
21	4.26	8.53
25	4.99	9.99
OFFSCALE	5.00	10.00