Haloguard® IR Sensor Module

MULTI-CHANNEL | INSTRUCTION MANUAL



SERIAL NO. _____

MODEL NO. — + _____

Temp. Range
1 - = > 60°F
2 - = 40 - 60°F
3 - = < 40°F

Gas Type
1 - R-11
2 - R-12
3 - R-22
4 - R-134a
5 - R-502
6 - R-717
7 - R-123

Range
1 - 0 - 1000 ppm

Mount
1 - Wall

Ext. Outputs
11 - None
12 - 0 - 5 VDC
0 - 10 VDC
13 - 4 - 20mA

Options
S - Scanner (No. Points)

ThermGAS

ThermGAS Inc. | Roswell, Georgia

(770) 667-3865 | info@thermgas.com

thermgas.com

******IMPORTANT******

USER MUST READ, FULLY UNDERSTAND AND FOLLOW ALL INSTRUCTIONS PROVIDED HEREIN BY THE MANUFACTURER FOR THE INSTALLATION AND OPERATION OF THE HALOGUARD IR REMOTE SENSOR MODULE. USE OF THE INSTRUMENT IN A MANNER NOT SPECIFIED HEREIN MAY IMPARE THE PROTECTION PROVIDED BY THE INSTRUMENT.

TABLE OF CONTENTS

		Page
1.	Unpacking Instructions	3
2.	Before Installation	3
3.	Installation	4
4.	Output Signal	5
5.	Communications Setup	6
6.	Jumpers	8
7.	Calibration	9
8.	Trouble Shooting	9
9.	Maintenance	11
10.	Obtaining Replacement Parts	11
11.	Service and Assistance	11
12.	Specifications	12
13.	Appendix A	13

FIGURES

1.	Wiring Diagram	4
2.	Layout Drawing	4
3.	IR Module Lower Circuit Board	5
4.	PPM Output Graph	7
5	Replacement Parts	11
6	Accessories	11
7	Exposure Limits	12
8	Pressure Switch	13

TABLES

1.	Sensor Cable Terminal Connection	6
2.	PPM V_{OUT} and I_{OUT} Values	6
3	Fault V_{OUT} and I_{OUT} Values	7
4.	Channel V_{OUT} and I_{OUT}	8
5.	Jumper Positions	8
6.	Troubleshooting Guide	9

UNPACKING INSTRUCTIONS

Haloguard® monitors are carefully packed, inspected and delivered to the carrier in good condition. If damage occurs in transit it is the responsibility of the carrier.

Carefully inspect the unit upon receipt. **Any damage should be reported to the carrier and an inspection requested.** After inspection by the carrier and your receipt of their acknowledgment as to the damage, contact us for return authorization (RMA). We cannot file claims for damaged goods on your behalf, but we will assist you in any way we can.

In order to expedite our work, please provide serial number and purchase date when you call.

WE CANNOT ACCEPT RETURNS WITHOUT PRIOR APPROVAL.

BEFORE INSTALLATION

1. Remove Haloguard IR Remote Sensor Module from carton. Check contents against packing list. If shipment is incomplete, contact us immediately.
2. The following tools and hardware are required for installation and calibration.
   a. Two standard & one Philips screwdrivers; 1 - medium standard w/ long shaft, 1 - jewelers fine standard & 1 - medium Philips.
   b. Needle-nosed electrician's pliers
   c. (4) No. 8 x 1" Screw (minimum)
   d. Digital VOM
3. Select a site for the installation:
   a. Power requirements: Provide a clean source of power 100-240VAC, 50/60 Hz, single-phase 15A minimum. *AC Line conditioning equipment may be necessary in some locations.*
   b. IR Module sample tube pick-up should be mounted near potential leaks in a quiet area or downstream from leak source in area with air movement.
   c. Sample tube pick-up should be located 18" - 24" above the floor. If using optional scanner, locate IR Module at a point central to chiller locations. Install inlet extension tube out to each remote sample location (up to 200 Ft. from IR module). Make sure each sample tube is equipped with an end of line filter.
   d. Make sure the area selected is not subject to flooding, potential impact or severe ambient temperature and humidity changes (i.e. boiler blow-down or near roll-up doors).
   e. Locate the unit so the top panel is easily seen and accessed for service and calibration, and that access to, and operation of the disconnect device is not restricted.
   f. Narrow band infrared detector is highly selective but may respond to the presence of other gases (i.e. paint thinner, cleaning fluids and other refrigerants) if interfering gas reaches a high concentration. For accurate refrigerant leak detection select a location free from above fumes or temporarily disable sensor when they are present. Contact ThermGAS Inc. for specific interference's.

CONSULT LOCAL AND NATIONAL ELECTRICAL CODES FOR ANY SPECIAL REQUIREMENTS OR RESTRICTIONS BEFORE INSTALLING HALOGUARD IR REMOTE SENSOR MODULE.

INSTALLATION

1. Check power supply. (See Section “Before Installation” 3.a.)
2. Disconnect power before beginning.
3. Mounting the Haloguard IR Remote Sensor Module:
    a. Mount IR Module in a vertical position in a location not subject to vibration or extreme temperature or humidity fluctuation. Install sample tube to 18-24” above floor, install filter.
    b. Securely mount the unit to a wall or support using appropriate hardware. **DO NOT MOUNT DIRECTLY TO CHILLER**. If vibration of mounting surface is unavoidable, use rubber grommets between the mounting clips and mounting surface.
    c. IR Module Inlet/Exhaust Extension (optional) sample tube may be extended up to 200FT with 0.125” OD x 0.093” ID nylon, copper or stainless steel tubing. When extending sample tubing:
        - Keep sample lines as short as possible and free of kinks.
        - 30-micron Inlet Filter should be attached at end of line.
    d. Exhaust to atmosphere. **DO NOT INSTALL ANY DEVICE WHICH MIGHT RESTRICT AIR FLOW**.

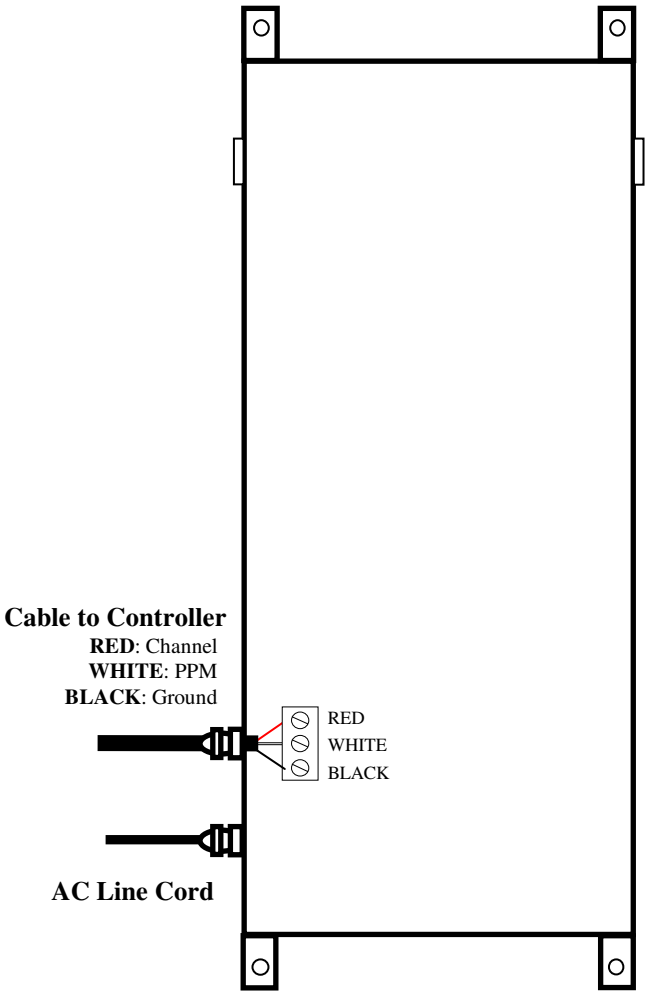

Figure 1 - Wiring Diagram

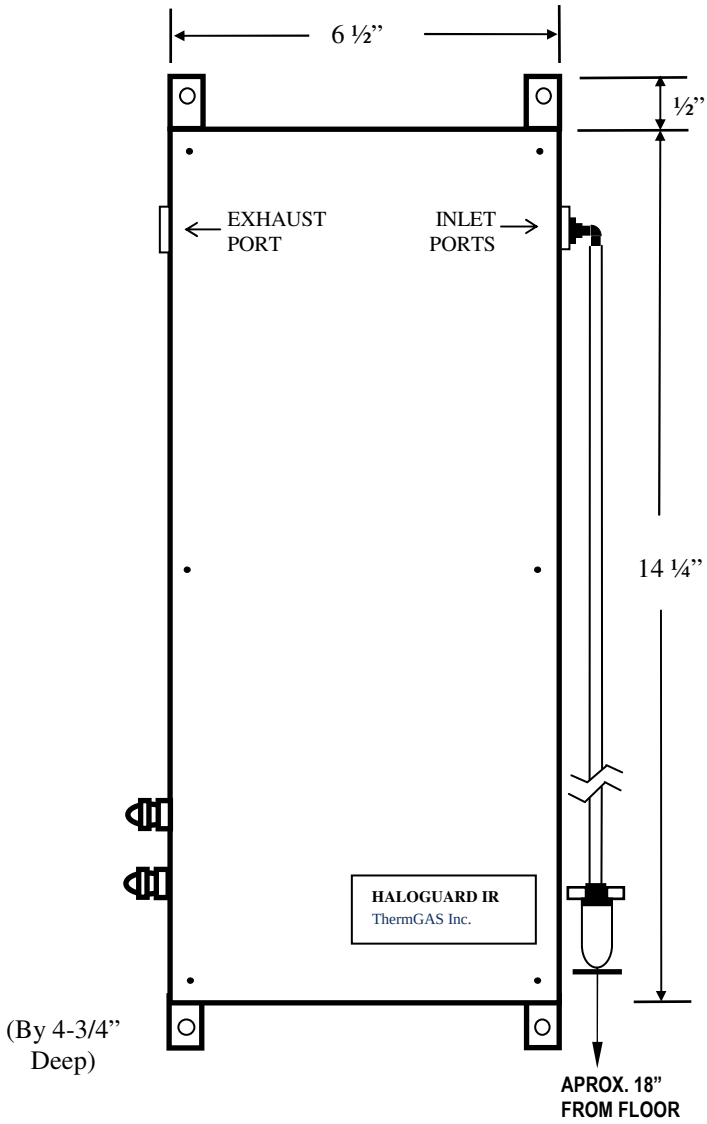

Figure 2 - Layout Drawing

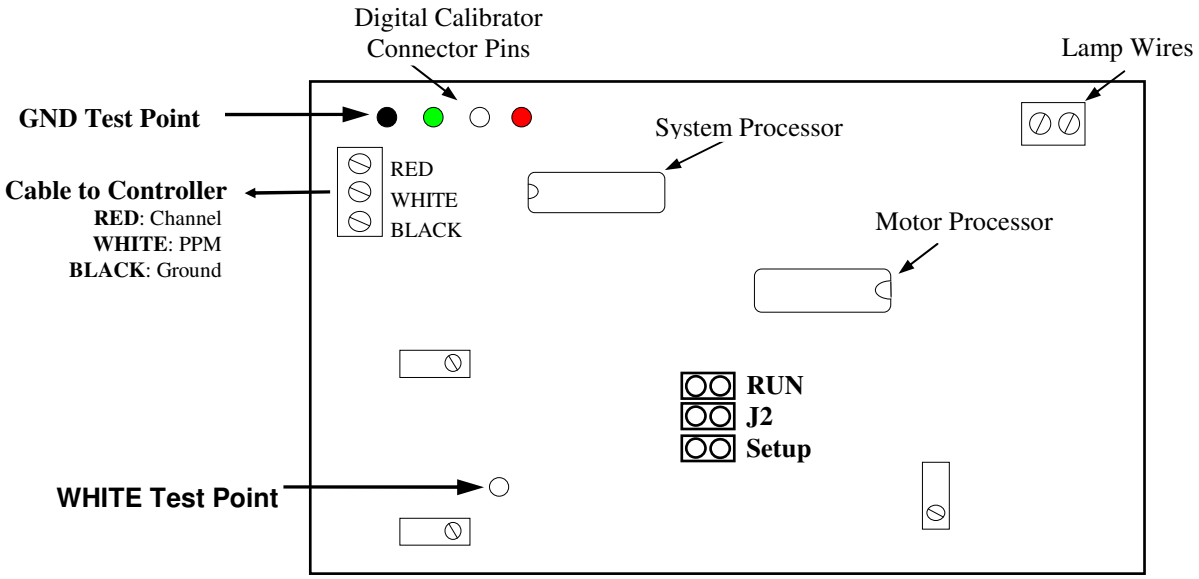

Figure 3 - IR Module Lower Circuit Board
(Not to Scale)

OUTPUT SIGNAL

1. Analog Signal Out - The Haloguard IR Remote Sensor Module signal uses a ground referenced, 0-20mA transmitter for both PPM and FAULT information. *A ground referenced 4-20mA transmitter is used for CHANNEL (Port) information.* These outputs share a common ground and should be terminated at the monitor/ controller with appropriate value resistor - 250Ω resistor for 0-5V_{OUT}.

2. Connection to Monitor/Controller - The IR Module may be successfully connected to a Building Management System (BMS) or other signal monitoring/controlling device using standard, 3-conductor, 20AWG instrumentation cable with overall foil shield from distances up to 2000 feet. *The shield should be only connected at the termination end (the controller side.)*

Refer to FIGUREs 1 and 3 before proceeding.

a. Wiring Instructions - Signal Cable to Monitor/Controller:
Haloguard IR Remote Sensor Module is provided with 6-1/2' cable with male DIN Connector and an additional 18"' of auxiliary cable with female DIN Connector is provided for connection to a BMS or other signal monitoring/controlling device. Where installation requires cable extension, proceed as follows:

We recommend 3-conductor, 20 ga. cable with foil shield, Carol C2525A or equal. Use 3/4" conduit if required.

b. To extend sensor beyond the provided length, use the 18" auxiliary cable with female DIN connector. Splice or solder extension cable to end of the cable. Reconnect extended sensor cable to terminal block on BMS or other monitoring/controlling device. Connect per Table 1.

Terminal	Provided Wire Color	Extension Wire Color	Function
SCAN	Red	Red	**Channel**
SIG	White	White	**PPM Signal**
GND	Blk./Blk	Black	**Ground**

Table 1 - Sensor Cable Terminal Connection

c. To compensate for line losses adjust signal voltage with a digital VOM as follows:

1. Open cover on Haloguard IR Remote Sensor Module. Move Jumper from RUN to SETUP (See Figure 3). **Wait approximately 1 minute before proceeding.**
2. Locate the signal terminal block in the BMS or other monitoring/controlling device.
3. For PPM Signal - Set VOM to 5 VDC scale (or Ampere scale for current output), place VOM probe on the **White** wire termination (+) and the Black wire termination GND (-).

   Adjust the voltage at the terminating resister until it reads 4.975 VDC +/-0.025 VDC.
   (or **Adjust the current at the controller until it reads 19.90mA**)
4. For Channel - Set VOM to 5 VDC scale, place VOM probe on the **Red** wire termination (+) and the Black wire termination GND (-).

   Adjust the voltage at the terminating resister to match the channel being sampled
   (Refer to Table 4 for voltage or current)
5. When done, replace IR Module jumper in **RUN** mode.

COMMUNICATION SETUP

Refer to Figure 3 - IR Remote Sensor Module Lower Circuit Board for measurement locations.

1. General - PPM and FAULT voltages (V_{OUT}) are measured at the WHITE test point indicated. Measure currents (I_{OUT}) at the terminal block labeled "Cable to Controller" with the sensor **NOT** connected to the controller. The **BLACK** wire is ground. The **WHITE** wire is PPM and FAULT signals. The **RED** wire is sample port (Channel) information. **Currents (I) are ground referenced.**
2. PPM Output - The PPM output of the Haloguard IR Remote Sensor Module is a linear response between ZERO (0 PPM) and SPAN (100 PPM). Table 1 represents the *calculated* values between these points. Using this information, the value for any PPM can then be predicted. The exact current output of a given sensor module may be determined by measuring between the **WHITE** wire and **BLACK** wire of the terminal block while the sensor is in the **RUN** mode at 0 PPM – the normal, free air condition, and while exposed to a span gas - normally 1000 PPM. When PPM values exceed 1000 PPM, a fixed OFFSCALE value (18.30 mA) is output. (See *Figure 4 - PPM Output Graph* as an example.)

PPM	V_{OUT}	I_{calc} (mA)
0	0.247	0.9866
1	0.249	0.9958
500	1.468	5.8702
1000	2.689	10.7546

Table 2 – PPM Values

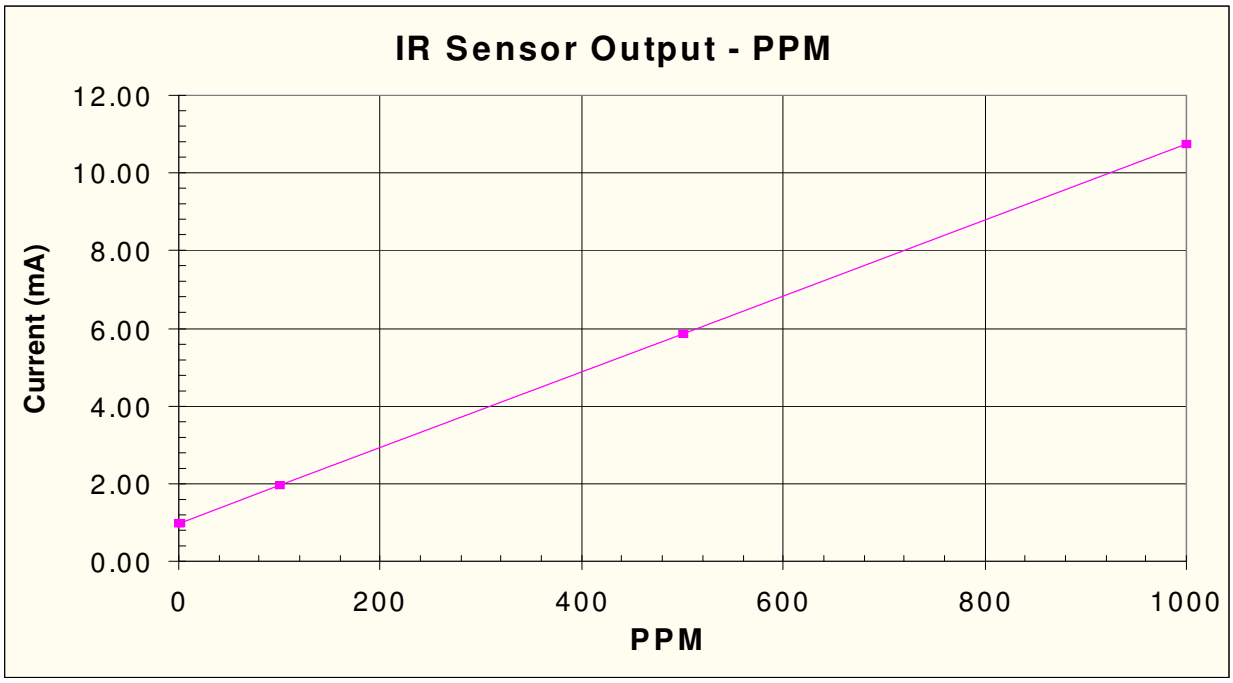

Figure 4 - PPM Output Graph

3. FAULT Output - **Table 3** represents the FAULT outputs from the Haloguard IR Remote Sensor Module. Placing the sensor in SETUP mode puts a reference current out which, *when terminated with a 250Ω resistor*, is trimmed to 4.975V. This is used to synchronize the sensor output to the controller. Placing the sensor in J2 mode outputs a very low value for calibrating (along with SETUP) the on board 0-20mA transmitters. This calibration is done during assembly of the IR Remote Sensor Module and is not usually required in the field.

FAULT	VOUT	Icalc (mA)
J2	0.02906	0.1162
OFFSCALE	4.575	18.30
BAD SPAN	4.625	18.50
PUMP FAIL	4.675	18.70
LOW TEMP	4.725	18.90
LAMP FAIL	4.775	19.10
CHOPPER FAIL	4.825	19.30
SETUP	4.975	19.90

Table 3 - Fault Values

In normal operations a signal between the monitor/controller and IR Remote Sensor Module is always present. Measurement of 0 Volts (0mA) at the controller end indicates one of two conditions:

a. A break in the wiring between controller and sensor
b. Loss of power on the IR Sensor Module.

COMMUNICATION SETUP (continued)

4. SAMPLE PORT (CHANNEL) Output - **Table 4** represents the CHANNEL No. (SAMPLE PORT) output from the Haloguard IR Remote Sensor Module. This value indicates the current sample point being measured and changes as each sample port valve changes. A LED light on the valve itself indicates the port currently being sampled. The IR Sensor Module samples gas from each port for approximately 2 minutes before sequencing to the next port. This means that for a 4-port scanner system it takes approximately 8 minutes to measure all ports and for an 8-port scanner system it will take approximately 16 minutes to measure all ports. When the wires are not terminated, the exact current output (I_{OUT}) may be measured between the **RED** wire and **BLACK** wire on the terminal block shown in *Figure 3*. **Table 4** also shows the voltage that results when the CHANNEL signal wire is terminated with a 250Ω resistor ($V_{TERMINATED}$).

Channel	I_{OUT} (mA)	$V_{TERMINATED}$ *
1	4.04	1
2	8.07	2
3	12.11	3
4	16.14	4
5	6.05	1.5
6	10.09	2.5
7	14.13	3.5
8	16.14	4.5

Table 4 – Sample Port (Channel) Values

* Voltage resulting from termination of Current out with a 250 Ohm resistor.

JUMPERS

There are 3 jumper positions on the Haloguard IR Remote Sensor Module as shown in *Figure 3 - IR Sensor Module Lower Circuit Board*. The standard unit will have 1 red jumper clip (shunt) shipped in the **RUN** position. The jumper operating modes are shown in the table below:

JUMPER	Definition
RUN	Normal operating mode
J2	For calibrating the on board 4-20mA transmitters. 0.02906V (0.1162mA)
SETUP	For synchronizing the sensor output to the controller. 4.975 V (19.90mA)

Table 5 – Jumper Positions

CALIBRATION

Haloguard IR monitors are factory calibrated to the gas of interest. Field recalibration is not required for operation in typical machine room environments during the first twelve months of operation unless drift exceeds more than 5ppm in a 30 day period.

For those who wish to check the factory calibration, an optional Digital Calibrator and Span Gas Kit is available. Instructions for use are included with kit.

With no refrigerant gas in the air the display should show 0-PPM. If the controller does not display 0 PPM, check the PPM communication voltage (See the PPM Output step of section 5 – "Communications Setup"). If 0-PPM still persists, check the Zero Calibration as follows:

a. Fill a clean plastic trash bag with clean outside air and tie off with twist-tie. Caution: take care that the outside air used is free from automobile exhaust fumes.

b. Let clean air sample stabilize inside for 15 - 20 minutes then insert sample tube into bag. For best results, observe until sample port LED lights. Wait an additional 45 seconds then insert sample tube into bag. Leave tube inserted until Port LED goes out.

c. Observe controller display. If displayed PPM value drops to a lower value, then the Haloguard IR controller is detecting the presence of the gas of interest or another gas that absorbs IR light at the same frequency.

d. With sample tube removed from bag repeat step b. Observe LCD response. If displayed PPM value moves higher, look for refrigerant leaks or possible sources of interfering gases (See section 3e, "Before Installation"). If the source is interfering gases relocation of the sensor may be required. Keep in mind that the Haloguard IR is much more sensitive than hand held leak detectors, it may detect a leak when hand held units show no response.

TROUBLESHOOTING

If proper regular maintenance is performed, the Haloguard IR Sensor Module is designed to operate error free under normal operating conditions for many years. Caustic environments or elevated temperatures can severely reduce this time. The most frequent cause of nuisance alarms and faults is improper set-up, primarily due to:

a. Failure to install in accordance with instructions.
b. Not allowing sufficient warm-up time.
c. Poor sensor location.

Self-diagnostics will indicate the cause of any malfunction (see **Table 3 - Fault Values**). If an instrument malfunction is indicated, it is often possible for the user to diagnose and correct the problem in the field using the following troubleshooting guide:

TROUBLE	DESCRIPTION	SOLUTION
IR Sensor Module is dead. ***CAUTION: potential shock hazard***	No sound from unit. Pump and Chopper not running. No power	1. Check input power to unit. 2. Verify power wiring. 3. Check for loose wires on terminal block. 4. Check low voltage wiring from power supplies. 5. Replace power supply.

Table 6 – Troubleshooting Guide

TROUBLE	DESCRIPTION	SOLUTION
No PPM output or PPM not changing on controller.	Wiring between Sensor and controller is loose or broken or current out IC is defective on PC board.	1. Check 4-20 mA wiring (**"Cable to Controller"** in Figure 3). 2. Check 4-20mA output using current meter with controller not connected.
BAD SPAN Fault ***Fault prevents Sensor Module from operating*** Calibration failed	18.50 mA measured at controller on power up of the IR Sensor Module. BAD SPAN is observed after a recalibration has been performed	Internal SPAN value is bad. Recalibrate the IR Sensor Module. 1. Check span gas supply. 2. Check sample bag for leaks 3. Check all tubing, filters and fittings for leaks. 4. Check calibrator connection.
Calibrator does not communicate with IR Sensor Module		1. Check connection to circuit board. (**"Digital Calibrator Connector Pins"** in Figure 3). 2. Replace calibrator.
PUMP FAIL Fault Pump laboring or not running.	18.70 mA measured at controller when SETUP and J2 jumpers are inserted. Listen for the pump to run. *Note: the pump in the Sensor Module does not run continuously, but rather cycles on and off.*	1. Check pressure switch. Adjust or replace as needed (See Appendix A). 2. Check inlet and exhaust port for particulate. 3. Check end-of-line and internal filters for blockage. 4. Check tubing for crimping, leaks or clogs. 5. Check for loose or disconnected tubing. 6. Check all valve openings. 3. Remove cell cover. Check cell valve connections. 7. Check Pump for broken or frayed wiring. Make sure it is securely fitted in the connector socket. 8. Cycle the power and observe the pump. 9. Replace Pump.
LOW TEMP Fault	18.90 mA measured at controller when SETUP and J2 jumpers are inserted. Internal temperature has dropped below normal operating range – nominal 40° C	This often occurs if unit has been left uncovered for an extended period of time. Note: If room is below 10° C auxiliary heating may be needed. 1. Close cover and allow one hour to warm up. 2. Check heater wiring. 3. Check source wiring.
LAMP FAIL Fault No glow from IR source	19.10 mA measured at controller when SETUP and J2 jumpers are inserted. Infrared source failed	1. Check source wiring 2. Replace source (optical bench). **THIS OPERATION IS NOT NORMALLY PERFORMED IN THE FIELD **
CHOPPER FAIL Fault Erratic chopper rotation	19.30 mA measured at controller when SETUP and J2 jumpers are inserted.	1. This can be caused by incident light if cell cover is removed. Replace cell cover. 2. Check chopper motor wiring. 3. Check for loose chopper blade. 4. Check for misaligned or loose optical detector. 5. Replace optical bench (chopper and Optical detector. **THIS OPERATION IS NOT NORMALLY PERFORMED IN THE FIELD **
Chopper rotates backwards	Chopper is rotating counterclockwise rather than clockwise.	1. A RED, BLACK, or GREY wire from the chopper motor is broken - usually inside the insulation. Generally this happens when the crimp connectors are used. The crimp pinches the wire breaking it inside the insulation. To test measure between the red/ grey and black/ grey wire pairs. This should not measure an OPEN.

Table 6 – Troubleshooting Guide (continued)

MAINTENANCE

The Haloguard IR Remote Sensor Module is designed to provide long and trouble-free operation in normal machine room environments. Minimal maintenance is required. Self-diagnostics will indicate the cause of any unusual malfunction. The end-of-line filter(s) should be examined periodically for dirt or dust build-up and replaced as necessary. The internal sample filter should be visually inspected at the same time and replaced if needed. To maintain appearance, clean the exterior with a soft, damp cloth. Do not use solvents, soaps or polishes.

Annual maintenance should include the following:

Inspect internal sample filters for discoloration. Replace as necessary.
Inspect all end-of-line filter(s) for dirt/ dust build-up. Replace as necessary.
Inspect all tubing for brittleness, seal, and holes. Replace as needed.
Inspect all screws and terminal blocks for looseness. Tighten as needed.
Test pressure switch. Trim or replace as necessary. (See "Appendix A".)
Expose the sensor to clean air and span gas sources. Recalibrate as needed.

OBTAINING REPLACEMENT PARTS

For spare or replacement parts and assistance, please contact ThermGAS Inc. directly.
Email info@thermgas.com or call 770-667-3865.

******IMPORTANT******

USE ONLY GENUINE THERMGAS INC. REPLACEMENT PARTS WHEN PERFORMING MAINTENANCE PROCEDURES. FAILURE TO DO SO MAY SERIOUSLY IMPAIR UNIT PERFORMANCE.

******IMPORTANT******

REPAIR OR ALTERATION OF THE HALOGUARD REMOTE IR SENSOR MODULE BEYOND THESE INSTRUCTIONS OR BY ANYONE OTHER THAN AUTHORIZED THERMGAS INC. SERVICE PERSONNEL COULD CAUSE THE PRODUCT TO FAIL TO PERFORM AS DESIGNED. PERSONS RELYING ON THIS PRODUCT FOR THEIR SAFETY COULD SUSTAIN SERIOUS PERSONAL INJURY OR DEATH.

Description	Part No.
Internal Filter, element	A702A
External Filter, element	A703A
Switcher Valve	A501
Pressure Switch	A708
Power Supply;	A707B
Vacuum Pump	A709

Figure 5 – Replacement Parts

Description	Part No.
Span Gas Calibration Kit	A204
Microprocessor	A704
Replacement Calibrator	A705

Figure 6 – Accessories

SERVICE AND ASSISTANCE

We wish to aid with any problems you might experience with the Haloguard IR Remote Sensor Module. To obtain assistance regarding any problem, please provide the following information (found on a label located on the side of the instrument):

- Model number and Serial number
- Description of problem

It is often possible for the user to diagnose and correct problems in the field using the troubleshooting chart in Table 6. If this procedure does not solve the problem, return of the Haloguard IR Sensor Module to ThermGAS Inc. may be necessary. Before shipping, obtain a Return Merchandise Authorization (RMA). Carefully pack the unit to protect it in transit; ThermGAS Inc. cannot be responsible for transit damage. Mark the shipping carton with the assigned RMA number. Contact ThermGAS for the current authorized return address.

ThermGAS Inc.
Attn: Service Department
info@thermgas.com
770-667-3865

SPECIFICATIONS

Technology:	Photoacoustic Infrared
Electrical Supply:	100-240 VAC, 50-60Hz; 65W
Analog Output	0 - 20mA PPM & Fault 4 - 20mA Channel
Accuracy:	1 ppm 0 - 100 ppm Range 10 ppm 100 - 1000 ppm Range
Ranges:	0 - 1000 ppm - All refrigerants
Response Time:	< 2.5 Minutes per point
Operating Conditions:	+32°F to +122°F (0°C to + 50°C), and 0-95% RH, Non-condensing
Materials:	Powder-coated Steel, NEMA 4/12/13 IP 65 Design
Weight:	8 lbs.
Dimensions:	6-1/2" W x 14-1/4" H x 4-3/4" D
Agency Ratings:	ASHRAE -15 & ASHRAE-147 compliant.
Electrical Safety:	Conforms to UL/CSA/EU 61010-1
EMC Compatibility	Conforms to FCC Part 15 B, ICES-003, Issue 5, ANSI C63.4, CISPR-11

Figure 7 - Exposure Limits (in PPM)

GAS	TLV-TWA*	IDLH♣	PEL▲
R-11	1000	50,000	1000
R-12	1000	50,000	1000
R-22	1000	50,000	1000
R-123	50	4,000	30
R-134a	1000	50,000	1000

***TLV-TWA** = 8hr./day, 40hr./wk. avg. Short term exposures should not exceed 3 - 5 times the TWA for more than 30 min./day. **ACGIH** Trademark.

♣**NIOSH** – Immediately Dangerous to Life and Health

▲**OSHA** – Permitted Exposure Limits

Appendix A

Pressure Switch Adjustment

This appendix provides information to adjust the pressure switch in the Haloguard® IR Sensor Module. The **PUMP FAIL FAULT** results from any restriction in the airflow path inside the IR Sensor Module. Flow failure is detected using an electro/ mechanical pressure switch in the flow path. This fault displays itself in two ways.

a. The fault may appear to come and go randomly. This indicates that the pressure switch is chattering.
b. The fault may appear constantly. This indicates that the pressure switch has failed and must be replaced.

Note that even though the pressure switch is the most likely source of this latter flow failure, this fault could be caused from a several things.

1. **The pump may have failed.**
   Check for airflow at the exhaust port.
   Listen for the pump to run. *Note – the pump does not run continuously, but rather cycles on and off.*
   Check the for broken or frayed wiring. Make sure the connector is securely fitted in its socket.

2. **The gas sample lines (or filters) may be crimped or blocked.**
   Inspect all tubing for crimping. Inspect the end of line filters for blockage from dirt or paint. Unscrew the porous piece and back blow it. Check the internal air filter for dirt. Replace filter if it appears dark.

3. **One of the switching valves may have failed or gotten clogged.**
   On multi port units only – Observe the LED light on each of the switching valves on the scanner block. If the fault only occurs as the IR Sensor Module cycles through a particular port, the valve for that port may need to be replaced. ***Note that a clog or a crimped line can also cause this condition***. Remove the inlet tube and repeat the observation.

4. **The pressure switch may have failed**
   The pressure switch is a small - approximately 1" square – black or gray device located half way between the pump and the exhaust port. It will have 2 wires attached by quick disconnects and 2 small holes on the switch side opposite the tubing. A slot screw is visible through one of these holes. The other is a relief port.

   Feel the relief port hole while the pump is running. If air is felt, the rubber seal is probably damaged and the switch should be replaced.

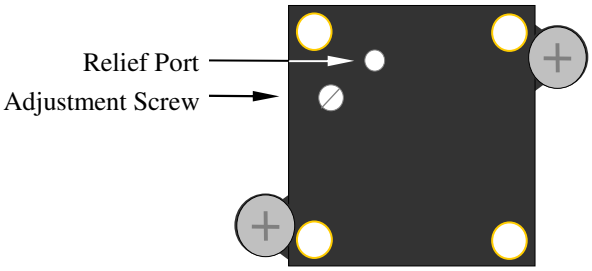

Figure 8 – Pressure Switch

5. **The pressure switch may be chattering.**
   If the fault appears and disappears repeatedly over a short time period, the switch may be "bouncing" and not closing fast enough for the detection circuit to consistently detect it.

Switch Adjustment

1. Place a dc voltmeter across the quick disconnects. With the pump running the meter will read approximately 0Vdc. With the pump ***not*** running the meter will read approximately 5Vdc.

2. To adjust: ***while the pump is not running*** – trim the brass screw clockwise until the voltage collapses (goes to 0v) then back off until the voltage just returns.